Chapter 12 Quantities, Costs, and Specifications

12.1 Quantities - General . . . 12-1
12.1.1 Cost Estimating Quantities . . . 12-1
12.1.1.A Conceptual Stage . . . 12-1
12.1.1.B Preliminary Plan Stage . . . 12-1
12.1.1.C Design Stage . . . 12-1
12.1.1.D Final Contract Quantities . . . 12-1
12.1.2 Not Included in Bridge Quantities List . . . 12-1
12.2 Computation of Quantities . . . 12-2
12.2.1 Responsibilities . . . 12-2
12.2.1.A Design Unit . . . 12-2
12.2.1.B Bridge Project Support Unit . . . 12-2
12.2.2 Procedure for Computation . . . 12-2
12.2.3 Data Source . . . 12-3
12.2.4 Accuracy . . . 12-3
12.2.4.A Preliminary Quantities . . . 12-3
12.2.4.B Final Quantities . . . 12-3
12.2.5 Excavation . . . 12-3
12.2.5.A Structure Excavation, Class A . . . 12-3
12.2.5.B Special Excavation . . . 12-5
12.2.6 Shoring or Extra Excavation, Class A . . . 12-6
12.2.7 Piling . . . 12-8
12.2.8 Conduit Pipe . . . 12-8
12.2.9 Private Utilities Attached To Bridge Structures . . . 12-9
12.2.10 Drilled Shafts . . . 12-9
12.3 Construction Costs . . . 12-10
12.3.1 Introduction . . . 12-10
12.3.2 Factors Affecting Costs . . . 12-10
12.3.2.A Type of Structure . . . 12-10
12.3.2.B Location of Project Site . . . 12-10
12.3.2.C Size of Project Contract . . . 12-10
12.3.2.D Foundation Requirements . . . 12-10
12.3.2.E Sequencing of Project . . . 12-10
12.3.3 Development of Cost Estimates . . . 12-11
12.3.3.A Types . . . 12-11
12.3.3.A.1 Prospectus and Project Summary Estimates . . . 12-11
12.3.3.A.2 Preliminary Design Estimates . . . 12-11
12.3.3.A.3 Estimate Updates During Design . . . 12-11
12.3.3.A.4 Contract Estimates . . . 12-11

12.3.3.B Responsibilities . . . 12-12
12.3.3.B.1 Bridge Project Support Unit . . . 12-12
12.3.3.B.2 Designer . . . 12-12
12.3.3.C Documentation . . . 12-12
12.3.3.D Cost Data . . . 12-12
12.3.3.D.1 General . . . 12-12
12.3.3.D.2 Deck or Wall Face Area . . . 12-12
12.3.3.D.3 Bridge Widenings and New Bridges . . . 12-13
12.3.3.D.4 Bridge Rail Replacement . . . 12-13
12.3.3.D.5 Bridge Lengths With Unequal Wingwalls . . . 12-13
12.3.3.D.6 Retaining Walls . . . 12-13

12.4 Construction Specifications and Estimates . . . 12-14

12.4.1 General . . . 12-14
12.4.2 Definitions . . . 12-14
12.4.2.A *Standard Specifications* . . . 12-14
12.4.2.B Mandatory General Special Provisions . . . 12-14
12.4.2.C Special Provisions . . . 12-14
12.4.2.D Addendum . . . 12-14
12.4.2.E AD Copy . . . 12-14
12.4.2.F As defined in *Standard Specifications* Section 1-02.4 . . . 12-14
12.4.3 General Bridge S&E Process . . . 12-15
12.4.3.A Typical Reviews and Milestone Dates . . . 12-15
12.4.3.B Constructability Review Set Distribution . . . 12-15
12.4.3.C PS&E Review Set Distribution . . . 12-16
12.4.4 Reviewing Bridge Plans . . . 12-16
12.4.4.A Job Files . . . 12-16
12.4.4.B PS&E Check List (Form 230-037 and Appendix 12.4-A1) . . . 12-16
12.4.4.C Summary of Quantities (Form 230-031 and Appendix 12.2-A1) . . . 12-17
12.4.4.D Plans . . . 12-17
12.4.4.E Not Included in Bridge Quantities List (Form 230-038 and Appendix 12.1-A1) . . . 12-17
12.4.4.F Geotechnical Report . . . 12-17
12.4.5 Preparing the Bridge Cost Estimates . . . 12-17
12.4.5.A General . . . 12-17
12.4.5.B Procedure . . . 12-18
12.4.6 Preparing the Bridge Specifications . . . 12-18
12.4.6.A General . . . 12-18
12.4.6.B Procedure . . . 12-18
12.4.7 Preparing the Bridge Working Day Schedule . . . 12-19
12.4.7.A General . . . 12-19
12.4.7.B Procedure . . . 12-19

12.4.8 Reviewing Projects Prepared by Consultants 12-20
12.4.8.A General 12-20
12.4.8.B Procedure 12-20
12.4.9 Submitting the PS&E Package 12-20
12.4.9.A General 12-20
12.4.10 PS&E Review Period and Turn-in for AD Copy 12-21
12.4.10.A Description 12-21
12.4.10.B Procedure 12-21
12.5 Appendices 12-22
Appendix 12.1-A1 Not Included In Bridge Quantities List 12-23
Appendix 12.2-A1 Bridge Quantities 12-24
Appendix 12.3-A1 Structural Estimating Aids Construction Costs 12-29
Appendix 12.3-A2 Structural Estimating Aids Construction Costs 12-30
Appendix 12.3-A3 Structural Estimating Aids Construction Costs 12-31
Appendix 12.3-A4 Structural Estimating Aids Construction Costs 12-33
Appendix 12.4-A1 Special Provisions Checklist 12-34
Appendix 12.4-A2 Structural Estimating Aids Construction Time Rates 12-39
Appendix 12.4-B1 Construction Working Day Schedule 12-41

12.1 Quantities - General

The quantities of the various materials and work items involved in the construction of a project that includes bridges and structures are needed for establishing the estimated cost of the project throughout the design process, and for establishing a basis for comparison of the contractor's bids.

12.1.1 Cost Estimating Quantities

Quantities for establishing cost estimates are often necessary during various stages of project development and are required at the completion of the Bridge PS&E. These quantities should be calculated from the best information available at the time, see Section 12.2.3. The policy regarding the preparation of quantity calculations is as follows:

12.1.1.A Conceptual Stage

During the conceptual stage of a project, estimated quantities may be required to arrive at an estimated cost. The need for conceptual stage quantities will be determined by the Bridge Project Support Unit.

12.1.1.B Preliminary Plan Stage

Upon completion of the preliminary plan, estimated quantities may be required to arrive at an estimated cost. The need for preliminary plan stage quantities will be determined by the Bridge Project Support Unit.

12.1.1.C Design Stage

If requested, quantity calculations shall be made, reviewed, and submitted to the Bridge Project Support Unit by the Bridge Design Unit as the design progresses. The first submittal of estimated quantities shall be made as soon as the major dimensions of the structure are determined. As refinements in the design are made, quantities varying more than 10 percent from those previously submitted shall be resubmitted.

12.1.1.D Final Contract Quantities

Upon completion of structural design and plans, the quantities of materials and work items involved in the construction of the project shall be computed. See Sections 12.2.2 and 12.2.4.B.

12.1.2 Not Included in Bridge Quantities List

Items of work which appear in the bridge plan sheets, but for which details, specifications, and quantities are not included in the Bridge PS&E, shall be listed in the "Not Included in Bridge Quantities List" (WSDOT Form 230-038 and Appendix 12.1-A1). This list is required for every bridge, even if no items of work are shown in the Plans that are in this category. (In this case, fill out the bridge information at the top of the form and write "NONE" across the form.) This form is transmitted to the Region Design PE Office with all Preliminary Plan submittals, all Bridge PS&E distributions, and at various milestone points during the design process, to ensure that the responsibility for all PS&E items is clear. Particular care shall be taken in the preparation of this list as omissions can result in an incomplete project PS&E with missing information for work items, or conflicting overlapping information for work items.

12.2 Computation of Quantities

12.2.1 Responsibilities

12.2.1.A Design Unit

The Design Unit is responsible for calculating quantities required for cost estimates for Preliminary Plans prepared in Design Units, calculating preliminary quantities at various milestones during the design process, and calculating quantities for the final Bridge PS&E. The Design Unit is responsible for notifying the Region Design PE Office and the Bridge Project Support Unit whenever structural design changes and alterations are made to the design features and quantities which affect the cost of the structure, especially following the distribution of the initial Preliminary Plan.

12.2.1.B Bridge Project Support Unit

The Bridge Project Support Unit is responsible for computing quantities for conceptual stage cost estimates, and cost estimates for Preliminary Plans prepared in the Bridge Project Support Unit. The Bridge Project Support Unit is responsible for ensuring that the quantities listed in the AD Copy Bid Proposal correspond to those received from the Design Unit.

12.2.2 Procedure for Computation

Quantities are to be computed and checked independently. The designer/originator and checker shall separately summarize their calculated quantities on the Bridge Quantities Form 230-031 (See Appendix 12.2-A1) in the units shown thereon. The two summaries shall be submitted to the Design Unit Manager for comparison. The designer/originator and checker shall use identical breakdowns for each quantity. For example, the designer/originator's quantities for excavation for each of Piers 1, 2, and 3 should be compared separately against the corresponding quantities made by the checker.

When the desired accuracy, see Section 12.2.4, is achieved, a Manager's Bridge Quantities form shall be prepared and submitted to the Bridge Project Support Unit along with the Pre-Contract Review Bridge Plans review set. (This form is the same as previously mentioned except that it is labeled "Manager's Bridge Quantities" and is completed by the Design Unit Manager or designee. If the Design Unit Manager elects, the designer/originator's or the checker's Bridge Quantities form may be designated as "Supervisor's Bridge Quantities.") This form is used by the Bridge Project Support Unit to prepare the final bridge cost estimate.

All quantity calculations and bridge quantities forms are to be filed in the Project Folder. All subsequent revisions shall be handled in the same manner as the original quantities. On the "Bridge Quantities" form, any revision to the original figure should not be erased but crossed out and replaced by the new figure using a different colored pencil. If there are too many revisions, the old summary sheet should be marked void, left in the file, and a new sheet made out, marked "Revised," dated, and the original forwarded to the Bridge Project Support Unit.

Mistakes in quantities can be very costly to Contracting Agency. The designer/originator and checker must account for all items of work on the "Bridge Quantities" form, and must also be careful to enter an item of work only once (e.g., concrete or steel rebar in the superstructure should not be entered both in the lump sum superstructure breakdown and in the unit bid item quantity).

12.2.3 Data Source

Quantities of materials for use in preliminary cost estimates can often be obtained from the quantities calculated for previous similar designs. This information is available from the Bridge Project Support Unit.

12.2.4 Accuracy

12.2.4.A Preliminary Quantities

Quantities used for cost estimates prepared during the conceptual stage of the design are expected to have an accuracy of ± 10 percent. The first iteration of quantities, after the preliminary plan has been completed, is expected to have an accuracy of ± 5 percent.

12.2.4.B Final Quantities

Final quantities in the Bridge PS&E submittal, including bar list quantities, to be listed in the Special Provisions and Bid Proposal sheet of the AD Copy, are to be calculated to have an accuracy of ± 1 percent.

12.2.5 Excavation

12.2.5.A Structure Excavation, Class A

Excavation necessary for the construction of bridge piers and reinforced concrete retaining walls is classified as Structure Excavation, Class A (see the definition as specified in *Standard Specifications* Section 3-07.3(2)). Payment for such excavation is generally by volume measurement. The quantity of excavation to be paid for is measured as specified in *Standard Specifications* Section 3-07.4, and computation of this quantity shall conform to these specifications. If the construction circumstances for the project require structure excavation limits that do not conform to the *Standard Specifications* definition, then the modified structure excavation limits shall be shown in details in the Plans.

Structure excavation for footings and seals shall be computed using a horizontal limit of 1 foot 0 inches outside and parallel to the neat lines of the footing or seal or as shown in the Plans. The upper limit shall be the ground surface or stream bed as it exists at the time the excavation is started. See Figure 12.2.5-1(A), (B), and (C).

Figure 12.2.5-1

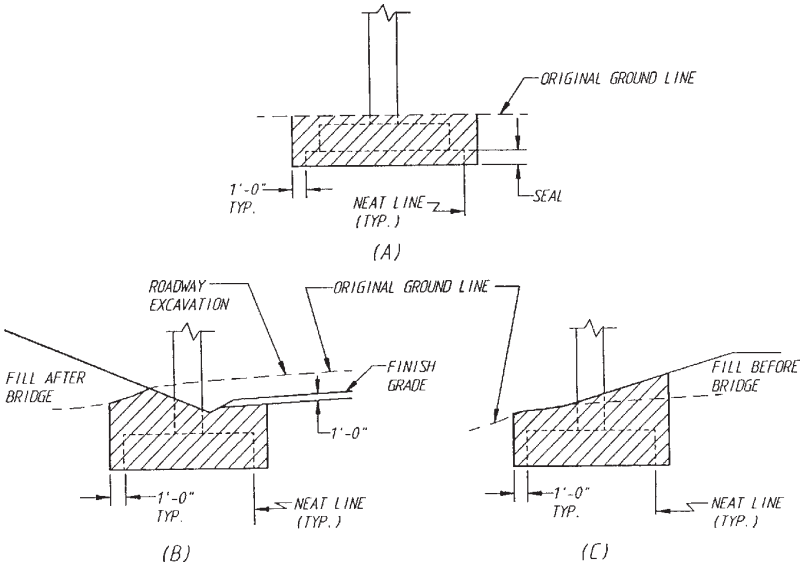

Structure excavation for the construction of wing walls shall be computed using limits shown in Figure 12.2.5-2.

Figure 12.2.5-2

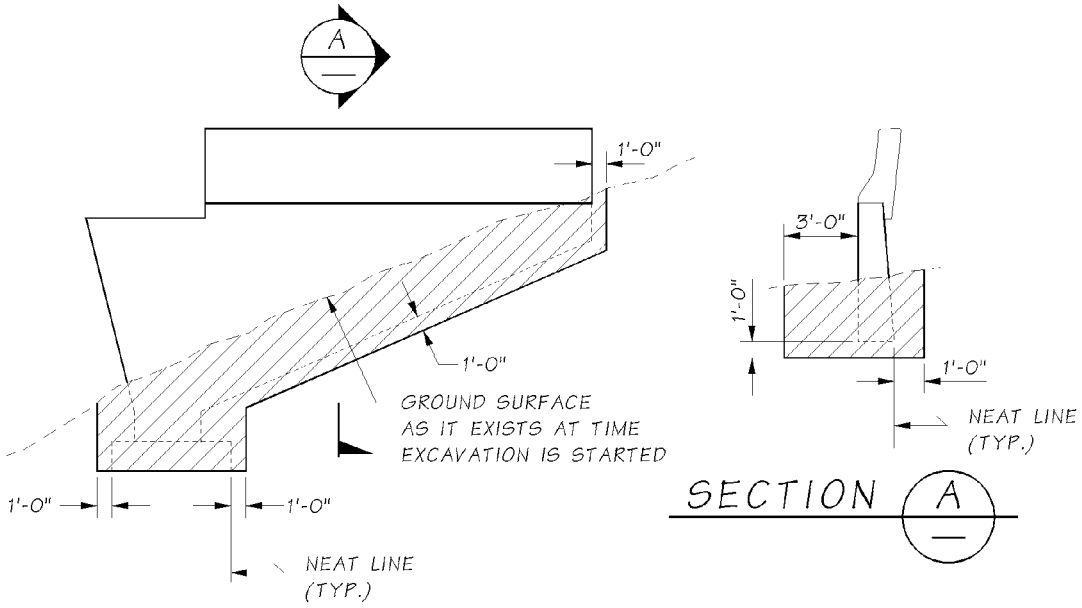

Figure 12.2.5-3

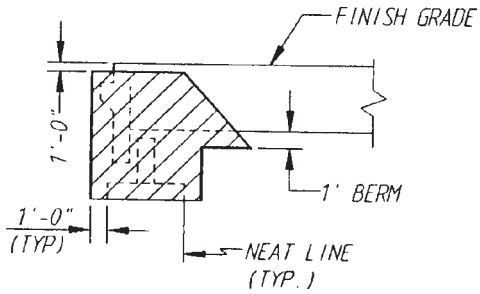

When bridge approach fills are to be constructed in the same contract as the bridge, and the foundation conditions do not require full height fills to be placed prior to the construction of the pier, the approach fill is constructed in two stages, i.e., constructed up to the bottom of footing or 1 foot above the bottom of footing, and then completed after the bridge construction. (The State Geotechnical Office shall be consulted on the staging method.) The structure excavation shall be computed from the top of the first stage fill.

The bottom of a spread footing will be placed 1 foot 0 inches below the top of the first stage fill. See Figure 12.2.5-4(A). The bottom of footings supported on piling will be placed at the top of the first stage fill; therefore no structure excavation is required (see Figure 12.2.5-4(B)).

The limits for stage fills shall be shown in the Plans with the structure excavation, if any.

Figure 12.2.5-4

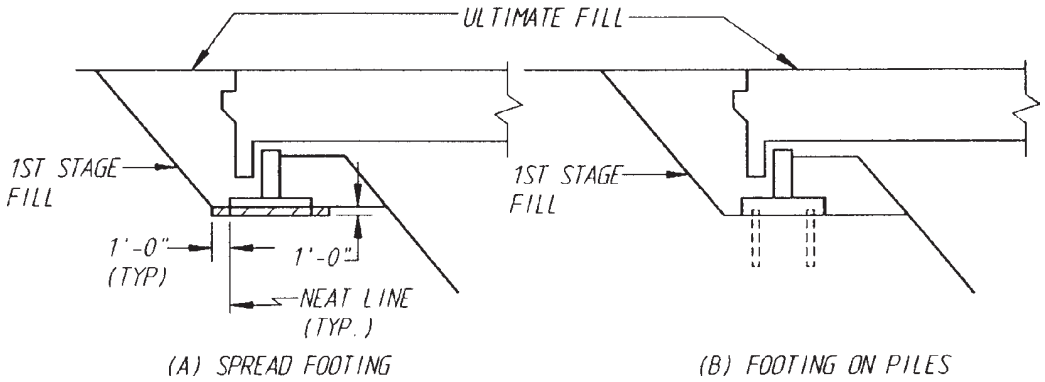

Prior to pier construction, when (1) a full height fill with or without surcharge is required for settlement, or (2) the original ground line is above the finish grade line, the upper limit of structure excavation shall be computed to 1 foot 0 inches below the finish grade (pavement) line (see Figure 12.2.5-5).

Figure 12.2.5-5

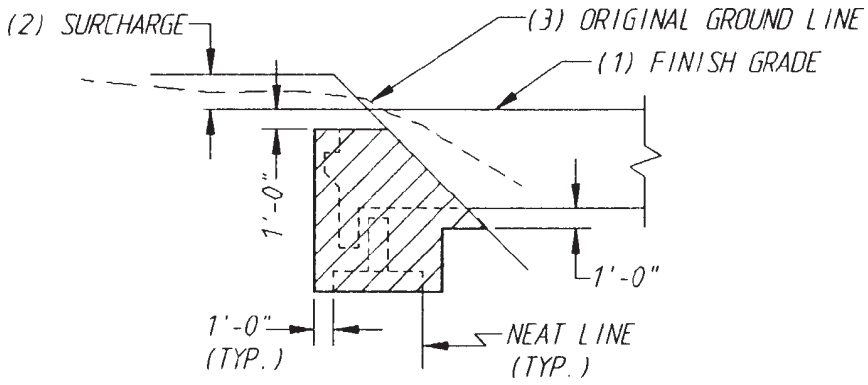

12.2.5.B Special Excavation

The excavation necessary for placement of riprap around bridge piers is called Special Excavation (see Figure 12.2.5-6).

Special excavation shall be computed from the top of the seal to the existing stream bed or ground line along the slopes indicated in the Plans. Special excavation will only include excavation outside the limits of structure excavation.

The limits for special excavation shall be shown in the Plans.

Figure 12.2.5-6

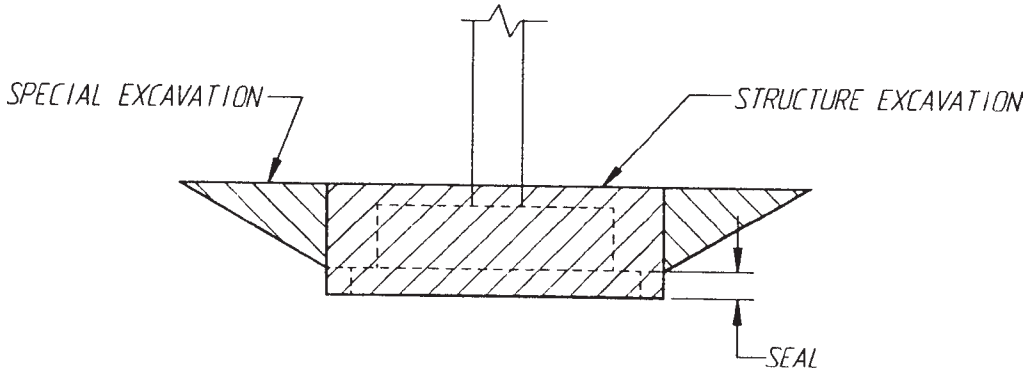

12.2.6 Shoring or Extra Excavation, Class A

Shoring, cofferdams or caissons, or extra excavation required for construction of bridge footings and reinforced concrete retaining walls constructed in the wet or dry is classified as Shoring or Extra Excavation, Class A. See *Standard Specifications* Section 3-07.3(3).

Structural shoring (for dry excavation) or cofferdams (for wet excavation) is required for all excavations near completed structures (foundations of bridges, walls, or buildings), near underground utilities, near railroad tracks, and near pavement. Shoring located within 25 feet the centerline of a railroad track shall be designed in accordance with the UPRR & BNSF Guidelines for Temporary Shoring. All other excavation four feet or more in depth shall be either shored with structural shoring or cofferdams, or shall meet the open-pit excavation requirements as specified in *Standard Specifications* Section 3-07.3(3)B.

For the purpose of estimating the cost for shoring or extra excavation, Class A, it is necessary to compute the peripheral area of an assumed sheet pile enclosure of the excavated area.

While payment for Shoring or Extra Excavation, Class A, is made at a lump sum contract price, the costs are a function of the overall height of excavation. In general, each side of the excavation for each pier shall be categorized into an average overall height range as shown on WSDOT Form 230-031 (i.e., less than 6 feet, 6 to 10 feet, 10 to 20 feet, or greater than 20 feet), the area for the side computed using the appropriate width times the average overall height, the overall area for the side shall be entered in the category that matches the side's average overall height. These calculations are required for each pier of the bridge as applicable. See accompanying Figure 12.2.6-1 and sample calculation.

For excavation in the dry, the peripheral area shall be the perimeter of the horizontal limits of structure excavation times the height from the bottom of the footing to the ground surface at the time of excavation.

For excavation in water, the peripheral area shall be the perimeter of the horizontal limits of structure excavation times the height from the bottom of the seal to 2 feet above the seal vent elevation.

For shaft-type excavations, it is not normally necessary to compute the area for shoring because the shoring is usually accommodated by the work items for permanent casing, temporary casing, and casing shoring.

Figure 12.2.6-1

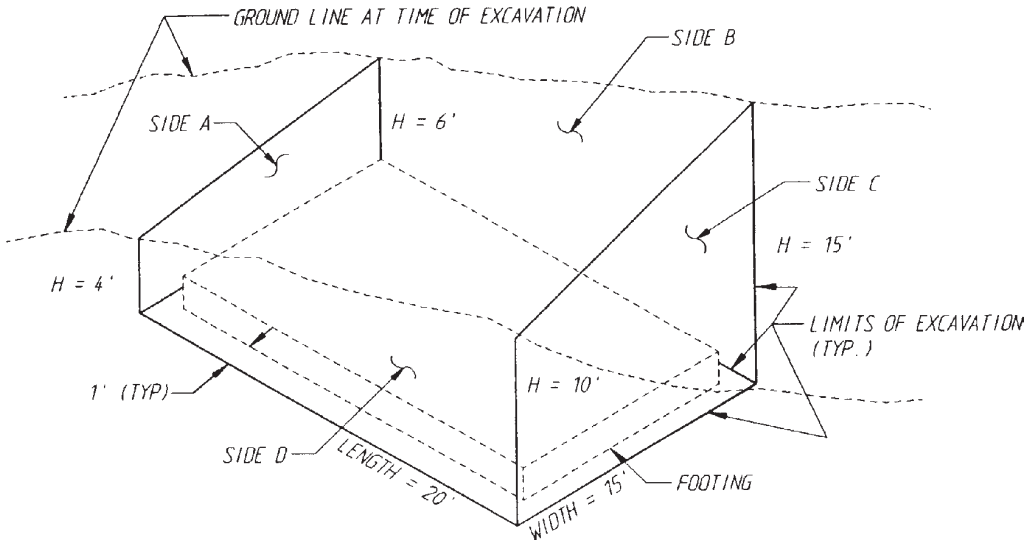

Sample Calculation:

For this pier (Figure 12.2.6-1):

Side A: average height = (4 + 6)/2 = 5 feet
width = 15 feet
area = 5 × 15 = 75 square feet

Side B: average height = (6 + 15)/2 = 10.5 feet
width = 20 feet
area = 10.5 × 20 = 210 square feet

Side C: average height = (10 + 15)/2 = 12.5 feet
width = 15 feet
area = 12.5 × 15 = 187.5 square feet

Side D: average height = (4 + 10)/2 = 7 feet
width = 20 feet
area = 7 × 20 = 140 square feet

For this example

Height Category	Area
less than 6 feet	75 square feet
6 feet to 10 feet	140 square feet
10 feet to 20 feet	210 + 188 = 398 square feet
greater than 20 feet	N.A.

These numbers would be entered on WSDOT Form 230-031 as follows:

Standard Item Number 4012	Item Use Standard Item	Item Description Shoring or Extra Excavation, Class A Dry: Average Overall Height	Quant. (Enter Total for Bridge Here)	Unit of Meas. L.S.
Pier	6 ft	6 ft to 10 ft	10 ft* to 20 ft	20 ft S.F.
Example	75 S.F.	140 S.F.	398 (11.5*) S.F.	— S.F.
	S.F.	S.F.	S.F.	S.F.
	S.F.	S.F.	S.F.	S.F.
	S.F.	S.F.	S.F.	S.F.

* Indicate Average Height

12.2.7 Piling

The piling quantities are to be measured and paid for in accordance with *Standard Specifications* Sections 6-05.4 and 6-05.5. Computation of piling quantities shall follow the same provisions.

Timber test piles are driven outside the structure limits and are extra or additional piling beyond the required number of production piling. See *Standard Specifications* Section 6-05.3(10).

Concrete or steel test piles are driven within the structure limits and take the place of production piling. In this case, the quantity for number and length of production piling is reduced by the number and length of test piling.

The quantity for "Furnishing _____ Piling _____" is the linear measurement of production piling below cut-off to the "estimated" pile tip (not "minimum" tip) specified in the Geotechnical Report. (Does not include test piles.)

The quantity for "Driving _____ Pile _____" is the number of production piling driven. (Does not include test piles.)

Pile tips are required if so specified in the Geotechnical Report. The tips on the test piles are incidental to the test pile; therefore, the number of pile tips reported on the Bridge Quantities Form 230-031 should not include the number of pile tips required on the test piles.

12.2.8 Conduit Pipe

It is WSDOT practice to embed two 2-inch diameter conduit pipes in all exterior concrete barriers constructed on bridges and retaining walls. The only exceptions to this practice are inside barriers of side-by-side twin bridges, and other project specific locations with the approval of the State Bridge Design Engineer. Only WSDOT electrical systems may use these conduit pipes. Conduit pipes for other private utilities cannot be embedded in structure elements, and must be otherwise suspended or attached to the structure, in accordance with the franchise lease agreement negotiated between the private utility and the Region's Utility Engineer.

In accordance with *Standard Specifications* Section 8-20.1(1) and RCW 19.28.161, conduit pipe installation work is considered electrical work that can only be performed by licensed electricians. As such, conduit pipe quantities can only be included in electrical work bid items, such as electrical lump sum bid items for "Illumination System", "Traffic Signal System", and "Communication System", or stand-alone unit contract bid items for "Conduit Pipe 2 In. Diam." Conduit pipe quantities **cannot** be made incidental to structural bid items such as "Superstructure", "Traffic Barrier", "Pedestrian Barrier", etc.

For bridges and retaining walls in projects that also include other electrical system work for illumination, traffic signals, and ITS systems, the conduit pipes and their associated junction boxes shall be included in the lump sum bid item cost estimates for the appropriate electrical system lump sum bid item.

For bridge and retaining walls in projects without any electrical system work (e.g., the conduit pipes are isolated and will exist initially as spares), the conduit pipe quantity shall be calculated for "Conduit Pipe 2 In. Diam", per linear foot. The measurement shall be the sum of all conduit pipe through the barriers and into the ground mounted junction boxes buried off the ends of the bridge corners as shown in the traffic barrier standard details. Each conduit pipe shall terminate in a separate junction box as shown in these details.

12.2.9 Private Utilities Attached To Bridge Structures

As mentioned above, conduit pipes for private utilities cannot be embedded in structure elements, and must be otherwise suspended or attached to the structure, in accordance with the franchise lease agreement negotiated between the private utility and the Region's Utility Engineer.

Because attachment of private utilities to bridge structures are subject to franchise lease agreements, the construction costs for furnishing and installing these utilities, including all associated supports, need to be kept separate from other bid items. The only portion of the utilities and their supports that can be made incidental to structure bid items, such as "Superstructure" and "Bridge Deck" are the concrete inserts cast into the deck slab of the bridge. All other quantities for the private utilities, including the support rods, braces, and conduit pipes, shall be included in the associated bid item(s) established for each separate private utility, whether as a lump sum bid item, or measured by linear measurement. These separate bid item(s) for these private utilities are the responsibility of the Design PE Office.

The same practice applies to WSDOT conduit pipes when such conduit pipes for ITS or other systems are suspended or attached to the structure. Other than the concrete inserts for support of such WSDOT conduit pipes, all other quantities for external WSDOT conduit pipe systems shall be included in the appropriate WSDOT electrical system lump sum bid item, under the responsibility of the Design PE Office or the Region Traffic Design Office.

12.2.10 Drilled Shafts

Constructing shafts is measured by the linear foot. The linear measurement is calculated using the top of shaft elevation and the bottom of shaft elevation for each shaft as shown in the Plans. This quantity covers all elements of shaft construction (including excavation and casing and access tubes for non-destructive QA testing of shafts) except for rock excavation and shaft QA testing as outlined below.

Rock excavation for shaft including haul is measured by the cubic yards of shaft excavated. The cubic yards shall be calculated based on the shaft diameter shown in the Plans, the top of rock line, defined as the highest bedrock point within the shaft diameter, and the bottom of shaft elevation shown in the Plans. Shaft QA test is measured once for each shaft tested. For establishing bid item quantities for the Proposal, it is always assumed that each shaft will be eligible for testing, so the quantity becomes one for each shaft in the project.

12.3 Construction Costs

12.3.1 Introduction

The construction costs itemized in Appendix 12.3-A1, 12.3-A2, 12.3-A3, and 12.3-A4 are to aid the user in estimating the cost of bridge and structure projects. The costs are based on historical data maintained by the Bridge and Structures Office and retrieved from recent WSDOT Contracts.

Requests for cost estimates from WSDOT Region Offices and other Local Agency offices should be submitted in writing (hard copy or email) to the Bridge Project Support Unit, and a written or email response will be returned within a reasonable time based on the schedule needs of the requesting office. Scoping or prospectus type cost estimates, and other cost estimates based upon deck area cost history and other readily available geotechnical information and project parameters can be prepared relatively quickly. Estimates requiring input from the Bridge Design Unit, either for preparation of preliminary quantities or other preliminary structural analysis will take longer to prepare.

Telephone requests for cost estimates from WSDOT Region Offices and other Local Agency Offices shall be referred to the Bridge Project Support Unit for response.

All cost estimates prepared by the Bridge and Structures Office should have the concurrence of the Bridge Project Support Engineer.

12.3.2 Factors Affecting Costs

12.3.2.A Type of Structure

Many factors, as outlined in Section 2.2.3, must be considered in the selection of the type, size, and location of a bridge or wall.

Common structures with conventional details will be within the low end and mid-range of costs. Unique or complex structures will be within the high end.

12.3.2.B Location of Project Site

Projects in remote areas or with difficult access will generally be within or above the high end of the cost range.

12.3.2.C Size of Project Contract

Small projects tend to be within the high end of the cost range while large projects tend to be within the low end of the cost range.

12.3.2.D Foundation Requirements

Foundation requirements greatly affect costs. Water crossings requiring pier construction within the waterway are generally very expensive. Scour requirements can push the costs even higher. The earlier foundation information can be made available the more accurate the cost estimate will be. The Bridge Project Support Unit should be made aware of unusual foundation requirements or changes to foundation type as soon as possible for updating of the estimate.

12.3.2.E Sequencing of Project

Projects with stage construction, detours, temporary construction, etc., will be more expensive.

12.3.3 Development of Cost Estimates

Estimates prepared by the Bridge and Structures Office shall include 10 percent mobilization but not sales tax, engineering, construction contingencies, or inflation.

12.3.3.A Types

12.3.3.A.1 *Prospectus and Project Summary Estimates*

Conceptual cost estimates are prepared when little information about the project is available. Use the construction costs in Appendix A, assuming the worst case conditions, unless actual conditions are known. An example of a worst case condition is deep foundation substructure (pile supported footings or shaft foundations). In remote areas, or for small projects, use the high end of the cost range. Use mid-range costs for usual conditions.

To cover unforeseen project modifications, add a 20 percent estimate contingency to a prospectus estimate and a 10 percent estimate contingency to a project summary estimate. These contingencies can be adjusted depending on the preliminary information available.

12.3.3.A.2 *Preliminary Design Estimates*

Preliminary design estimates are prepared during the preliminary design stage when the type and size of bridge is known. Limited foundation information is sometimes available at this stage. The construction costs in Appendix A shall be used with an appropriate inflation factor, assuming the worst case conditions, unless foundation conditions are known, along with a minimum of 10 percent contingency to cover scope creep.

12.3.3.A.3 *Estimate Updates During Design*

During the design period, the designer should keep the Bridge Project Support Unit informed of significant changes to the design that might affect the cost. Examples of significant changes are: deeper than expected footing and seals, use of deep foundations (shafts or piles) when none were previously expected, change of substructure types, and changes to superstructure. This is a critical element in the project budgeting process.

12.3.3.A.4 *Contract Estimates*

The contract estimate is prepared by the Bridge Project Support Unit after the Plans and Final Quantities have been submitted to the Bridge Project Support Unit for preparation of the final Bridge PS&E. The contract estimate is prepared using the quantities furnished by the Bridge Design Unit, unit bid prices from Appendix A, other historical data, and the judgment of the engineer preparing the estimate. Unique, one-of-a-kind projects require special consideration and should include an appropriate construction cost contingency.

12.3.3.B Responsibilities

12.3.3.B.1 *Bridge Project Support Unit*

The Bridge Project Support Unit is responsible for preparing the prospectus, project summary, preliminary, and final contract estimates and updating the preliminary estimate as needed during the design phase of the project.

The Bridge Project Support Unit assists the WSDOT Region Offices and other outside Local Agency Offices, such as counties and cities, to prepare prospectus and project summary estimates when requested in writing.

12.3.3.B.2 *Designer*

The designer is responsible for providing preliminary quantities and final quantities to the Bridge Project Support Unit to aid in the updating of preliminary estimates and the preparation of contract estimates.

12.3.3.C Documentation

The Cost Estimate Summary shall be maintained in the Project Folders. During the design stage, the summary sheet shall be maintained by the Bridge Design Unit. At a minimum, the Cost Estimate Summary should list the initial and all subsequent cost estimates for each Preliminary Plan distribution made. It is the Design Unit Manager's responsibility to ensure the summary sheet is up to date when the Project Folder is transferred to the Bridge Project Support Unit for preparation of the Bridge PS&E.

12.3.3.D Cost Data

12.3.3.D.1 *General*

The Bridge costs summarized in Appendix A represent common highway, railroad, and water crossings. Consult the Bridge Project Support Unit for structures spanning across large rivers or canyons and other structures requiring high clearances or special design and construction features.

The square foot costs are useful in the conceptual and preliminary design stages when details or quantities are not available. The various factors affecting costs as outlined in Section 12.3.2 must be considered in selecting the square foot cost for a particular project. As a general rule, projects including none or few of the high-cost factors will be close to the mid-range of the cost figures. Projects including many of the high-cost factors will be on the high side. The user must exercise good judgment to determine reasonable costs. During the preliminary stage, it is better to be on the prudently conservative side for budgeting purposes.

12.3.3.D.2 *Deck or Wall Face Area*

The area to be used for cost estimates based upon deck or wall face area shall be computed as follows:

12.3.3.D.3 *Bridge Widenings and New Bridges*

The deck area of bridges is based on the actual width of the new portion of the bridge deck constructed (measured to the outside edge of the bridge deck) times the length, measured from end of wingwall to end of wingwall, end of curtain wall to end of curtain wall, or back to back of pavement seat if there are no wingwalls or curtain walls. Wingwalls are defined as walls without footings which are cast monolithically with the bridge abutment wall and may extend past the abutment footing. Curtain walls are defined as walls that are cast monolithically with the bridge abutment wall and footing and only extend to the edge of footing.

12.3.3.D.4 *Bridge Rail Replacement*

The bridge rail and curb removal is based on the total length of the rail and curb removed.

12.3.3.D.5 *Bridge Lengths With Unequal Wingwalls*

If a bridge has wingwalls or curtain walls of unequal length on opposite sides at a bridge end of wingwalls or curtain walls on one side of a pier only, the length used in computing the square foot area is the average length of the walls. If the wingwalls are not parallel to the centerline of the bridge, the measurement is taken from a projected line from the end of the wingwall normal to the centerline of the roadway.

12.3.3.D.6 *Retaining Walls*

If retaining walls (walls that are not monolithic with the abutment) extend from the end of the bridge, the cost of these walls is computed separately. The area of the wall is based on the overall length of the wall, and the height from the top of footing to the top of the wall.

12.4 Construction Specifications and Estimates

12.4.1 General

The Bridge Project Support Unit prepares the specifications and estimates (S&E) for all structural projects designed or reviewed by the Bridge and Structures Office. The preparation includes distributing review sets, reviewing the Project Folder, plans, PS&E check list, "Not Included in Bridge Quantities List," and Geotechnical Report; preparing the cost estimates, specifications, and working day schedules; and submitting the PS&E package to the Region.

12.4.2 Definitions

12.4.2.A Standard Specifications

The *Standard Specifications* is published annually by the WSDOT Engineering Publications Office, is maintained by the WSDOT Construction Office, and is used as the governing construction specification for all WSDOT construction projects.

12.4.2.B Mandatory General Special Provisions

Mandatory General Special Provisions are revisions to specific sections of the *Standard Specifications*, which are enacted during the year period that a specific edition of the *Standard Specifications* is in force. Mandatory General Special Provisions are published throughout the year as immediate needs for specification additions and revisions arise.

12.4.2.C Special Provisions

Special Provisions are supplemental specifications and modifications to the *Standard Specifications*, which apply to a specific project.

12.4.2.D Addendum

A written or graphic document, issued to all bidders and identified as an addendum prior to bid opening, which modifies or supplements the bid documents and becomes a part of the contract.

12.4.2.E AD Copy

The AD copy is the contract document advertised to prospective bidders. The AD Copy may include, but not be limited to, the following as component parts: Bid Proposal Form, Special Provisions, Amendments, Plans, and Appendices including test hole boring logs, and environmental permit conditions.

12.4.2.F As defined in *Standard Specifications* Section 1-02.4

The order of precedence of AD Copy components is as follows: Addenda, Bid Proposal Form, Special Provisions (including Mandatory General Special Provisions, Plans, *Standard Specifications*, and *Standard Plans*.

12.4.3 General Bridge S&E Process

12.4.3.A Typical Reviews and Milestone Dates

The Ad Date, as established by the Region, is the anchor for all project schedule dates.

The Scope Of Work Agreement (SOW) is a document negotiated between the Design PE Office and the Bridge and Structures Office establishing the deliverables (design submittals) to be produced and the due dates for the various deliverable review milestones for the specific project.

The Structural Submittal Expectations Matrix at www.wsdot.wa.gov/publications/fulltext/ProjectMgmt/DEM/Bridge.pdf outlines the expected content of the design submittal deliverables at specific stages of design development.

When a Constructability Review is set by the SOW, the Bridge Design Unit or Bridge Consultant assigned to the project is responsible for providing the plan content specified by the design matrix, and providing the quantities based on preliminary foundation design sizes. The Bridge Project Support Unit is responsible for providing the cost estimate and a set of Special Provisions that includes all applicable General Special Provisions (GSPs). The GSPs with fill-ins need not have the fill-in text included at this time, and project specific Special Provisions need not be included at this time.

The Bridge Design Unit or Bridge Consultant shall coordinate with the Bridge Project Support Unit with enough lead time to allow completion of the cost estimate and Constructability Special Provisions in time for the Constructability Review submittal to the Region Design PEO.

For the PS&E Review Set turn-in, the Bridge Design Unit or Bridge Consultant assigned to the project shall provide completed plans and quantities to the Bridge Project Support Unit at least two-weeks in advance of the scheduled PS&E Review turn-in date. The Bridge Project Support Unit is responsible for developing a complete set of Special Provisions, with completed GSPs and project specific special provisions, and a complete cost estimate.

For hydraulic, mechanical, and electrical rehabilitation projects for movable bridges, the Bridge Preservation Office takes a lead role in managing the design process for the project.

12.4.3.B Constructability Review Set Distribution

The Bridge Specifications and Estimates Engineer assigned to the project distributes the Constructability Review set, consisting of PDFs of the Structure Plans, cost estimate, and assembled bridge special provision document (raw GSPs), and the Word document of the associated special provision runlist, to the following:

- Design Project Engineer
- Design PEO Team Leader
- Design PEO Designer
- Region Plans Office Reviewer
- Bridge Design Unit Supervisor
- Bridge Design Unit Team Leader/Designer

The Bridge Design Unit Team Leader/Designer and Bridge Specifications and Estimates Engineer for the project participate in the Constructability Review and coordinate to address review comments generated by the review.

12.4.3.C PS&E Review Set Distribution

The Bridge Specifications and Estimates Engineer assigned to the project distributes the PS&E Review set to the following:

- FHWA Washington Division Bridge Engineer
- Materials Laboratory (Record of Materials and PS&E Distribution mailbox)
- HQ Geotechnical Office
- HQ Construction Office Bridge Engineer
- State Bridge Design Engineer
- Bridge Scheduler
- Bridge Project Support Manager
- Bridge Preservation Office
- Bridge Design Unit Supervisor
- Bridge Design Unit Team Leader/Designer
- State Bridge and Structures Engineer – Large or complicated projects only
- Design Project Engineer
- Design PEO Team Leader
- Design PEO Designer
- Region Plans Office Reviewer

The content of the distribution set is defined by Section 12.4.9.A.

The Bridge Design Unit Team Leader/Designer and Bridge Specifications and Estimates Engineer for the project participate in the PS&E Review and coordinate to address review comments generated by the review.

12.4.4 Reviewing Bridge Plans

The Bridge Specifications and Estimates Engineer performs the following tasks after receiving the Structure Plans and associated quantities from the Bridge Design Unit or Bridge Consultant in advance of the PS&E Review set distribution:

12.4.4.A Job Files

Review correspondence and emails in the job files for the items of work and other commitments which need to be included in the Bridge PS&E. Identify items that need special provisions and bid item references. Identify items that require additional research by, and information from, the bridge designer, Region designers, or others.

12.4.4.B PS&E Check List (Form 230-037 and Appendix 12.4-A1)

Review the form as completed by the bridge designer for identified needs for special materials, construction requirements, permits, etc., which may need Special Provisions such as:

- Permits: United States Coast Guard
- Agreements: utilities on bridge, etc.
- Materials: high strength structural steel, high-strength concrete, polyester and polymer concrete, carbon fiber wrap, high-load elastomeric bearing pads and other high capacity bridge bearings, etc.

- Construction Requirements: temporary access, stage construction, construction over railroad, special welding and welding inspection requirements, and other special construction requirements
- Special Items: modified concrete overlay or special architectural, paint, and sealer treatments
- Proprietary Materials: identification of, and justification for use of, products and materials which are specified in the Structure Plans by specific manufacturer and model, instead of generic manufacture

12.4.4.C Summary of Quantities (Form 230-031 and Appendix 12.2-A1)

Verify that the Summary of Quantities is labeled as "Manager's Bridge Quantities." See Section 12.2.2. Quantities listed in this form are used to develop the Bridge Cost Estimate for the project.

12.4.4.D Plans

Review the plans for consistency with the special needs identified by the bridge designer in the PS&E check list form (subsection B above), use of standard notes and General Notes, completeness of title block information, and use of terminology consistent with the *Standard Specifications*, *Standard Plans*, and Standard Bid Items.

12.4.4.E Not Included in Bridge Quantities List (Form 230-038 and Appendix 12.1-A1)

Review the form completed by the bridge designer and compare with the Structure Plans for items shown in the Structure Plans that may be missing from the list. See Section 12.1.2.

12.4.4.F Geotechnical Report

Review the Geotechnical Report for the project to confirm that the foundation types, sizes, and elevations shown in the Bridge Plans are consistent with the recommendations specified in the Geotechnical Report. Obtain a copy of the final Geotechnical Report for the S&E file. Review the Geotechnical Report for construction consideration requirements which may need to be noted in the Special Provisions, such as shaft casing requirements, bridge embankment settlement periods, special excavation, etc. Compare the number of test holes and the locations shown in the layout sheets for all bridges against number and locations of test holes identified in the final Geotechnical Report.

12.4.5 Preparing the Bridge Cost Estimates

12.4.5.A General

From the quantities shown in the Summary of Quantities form submitted with the Structure Plans (whether for Constructability Review or PS&E Review), the Bridge Specifications and Estimates Engineer develops the Bridge Cost Estimate for the project. The Bridge Project Support Unit uses a standard spreadsheet format for Cost Estimates. This spreadsheet includes the tabulation of all bridge bid items, a breakdown for each lump sum item, and square foot cost of the structure.

12.4.5.B Procedure

Each quantity shown in the Summary of Quantities form is to be matched with an appropriate unit bid item or lump sum bid item. These can be Standard Bid Items from the Standard Bid Item Table, or project specific non-standard bid items.

Pricing for the bid items above can be based on the Construction Cost Estimating Aids listed in Appendices 12.3-A1, 12.3-A2, 12.3-A3, and 12.3-A4, bid tabulations from previous contracts, and the Unit Bid Analysis and Standard Item Table listing available through the WSDOT Contract Ad & Award Office web site. The Bridge Specifications and Estimates Engineer uses appropriate engineering judgment to make appropriate adjustments for inflation, site location, quantities involved, total of the work involved, etc.

All Standard Bid Items listed in the spreadsheet shall include the Standard Bid Item number assigned to that bid item. All non-standard bid items shall be identified by the appropriate pre-qualification code for the bid item work. The pre-qualification codes specified in the Standard Item Table should be reviewed to help establish the appropriate code for non-standard bid items. When in doubt, the general Bridge and Structures pre-qualification code of (B0) should be used.

All bridge cost estimates shall include mobilization, but do not include sales tax, engineering, contingencies or inflation.

12.4.6 Preparing the Bridge Specifications

12.4.6.A General

There are two categories of Special Provisions:

1. General Special Provisions (GSP's) are supplemental specifications which are standardized and approved for Statewide use, and maintained by the WSDOT Construction Office. GSP's are formatted to supplement specific *Standard Specifications* Sections. GSP's are identified by their publication and effective date in parenthesis immediately preceding the GSP text.
2. Project Specific Special Provisions include all supplemental specifications which are not GSP's. Project Specific Special Provisions, as the name implies, are intended for project specific use, whether one time or infrequent. The vast majority of Project Specific Special Provisions are formatted to supplement specific *Standard Specifications* Sections. However, in rare cases, they can be formatted as "stand-alone" following the "**Description/Materials/Construction Requirements/Measurement/Payment** format. Project Specific Special Provisions are identified by six asterisks in parenthesis immediately preceding the text or heading. A Project Specific Special Provision that sees frequent use can be standardized and elevated to GSP status.

12.4.6.B Procedure

Based on review of the Structure Plans and the PS&E Check List, the Bridge Specifications and Estimates Engineer determines the items of work which are not already covered by the *Standard Specifications* and for which supplemental specifications are needed. Based on this determination, and review of the current list of GSP's, a Bridge Special Provision runlist is prepared, listing the multi-character code of the applicable GSP documents needed for the project. GSP documents are listed in the WSDOT Construction Office web site.

These documents are listed following the section order of the *Standard Specifications*. Fill-in blanks for GSP's requiring project specific information can be completed at this time.

When the *Standard Specifications* and GSP's are insufficient to cover project specific requirements, Project Specific Special Provisions are developed, and added by name at the appropriate location in the runlist.

See the *Plans Preparation Manual* Division 6 for further discussion and example flow charts.

When the Bridge Special Provision file is complete with all Special Provisions needed to accompany the Structure Plans, the Bridge Specifications and Estimates Engineer compiles a single space document of the Bridge Special Provision file for use in the Bridge PS&E distribution.

12.4.7 Preparing the Bridge Working Day Schedule

12.4.7.A General

The Bridge Specifications and Estimates Engineer calculates the number of the working days necessary to construct the bridge portion of the contract, based on the quantities shown in the Summary of Quantities form submitted with the Bridge Plans, and enters the time in the special provision "Time for Completion." The working days are defined in the *Standard Specifications* Section 1-08.5.

12.4.7.B Procedure

The first task of estimating the number of working days is to list all the construction activities involved in the project. These include all actual construction activities such as excavation, forming, concrete placement, and curing; and the non-construction activities such as mobilization, material and shop plan approval. Special conditions such as staging, limited access near wetlands, limited construction windows for work in rivers and streams, limited working hours due to traffic and noise restrictions, require additional time.

The second task is to assign the number of working days to each construction activity above (see Appendix 12.4-A2). The "Construction Time Rate" table can be used as a guide to estimate construction time required. This table shows the average rate of output for a single shift, work day only. Adjustment to the rates of this table should be made based on project size, type of work involved, location of the project, etc. In general, larger project will have higher production rates than smaller projects, new construction will have higher production rates than widening, and unstaged work will have higher production rates than stages work.

The last step is to arrange construction activities, with corresponding working days, into a construction schedule on a bar chart, either by hand on the Construction Working Day Schedule Form 230-041 (see Appendix 12.4-B1) or by computer using a scheduling program. List the activities in a logical construction sequence, starting from the substructure to the superstructure. Items shall overlap where practical and the critical path shall be identified.

12.4.8 Reviewing Projects Prepared by Consultants

12.4.8.A General

Consultants preparing Structure Plans for WSDOT projects submit their Plans and quantities to the Bridge and Structures Office before the scheduled Bridge PS&E turn-in date, and with all associated information (files, forms, lists, and reports), as specified in Sections 12.4.3 and 12.4.4.

The package shall be in the same format as those prepared by the Bridge and Structures Office.

12.4.8.B Procedure

The Bridge Specifications and Estimates Engineer reviews the consultant's Structure Plans following the process as specified in Sections 12.4.3 and 12.4.4. The review comments of the Bridge Specifications and Estimates Engineer are combined with review comments from the Bridge Design Unit assigned to review the project, and returned to the consultant in a timely manner through the Bridge Consultant Liaison Engineer, allowing the consultant to meet the scheduled turn-in date for the Bridge PS&E. After the consultant addresses all review comments and resubmits the package as 100 percent complete, the Bridge Specifications and Estimates Engineer compiles the Bridge PS&E package (See Section 12.4.9).

Except for hydraulic, mechanical, and electrical rehabilitation projects for movable bridges, and other unique bridge projects where specifically approved by the Bridge Project Support Engineer, all Bridge Special Provisions shall be prepared by the Bridge Project Support Unit. The Bridge Cost Estimate and working day schedule should be prepared by the Bridge Specifications and Estimates Engineer with assistance from the consultant as appropriate.

12.4.9 Submitting the PS&E Package

12.4.9.A General

The PS&E package includes:

1. PDF of Bridge Construction Cost Estimate for each separate structure
2. PDF of Not Included in Bridge Quantity List
3. PDF of Construction Working Day Schedule
4. PDF of compiled Bridge Special Provision document with runlist
5. Word document of individual project specific Bridge Special Provisions and GSPs with fill-ins, and Word document of the associated runlist
6. PDF of the Structure Plan Set for all Structures

The Bridge PS&E is distributed to those identified in Section 12.4.3.B.

12.4.10 PS&E Review Period and Turn-in for AD Copy

12.4.10.A Description

The PS&E Review Period between Bridge PS&E turn-in and Ad Date allows the Region to compile PS&E from their Design PE Office and all support groups into a Review PS&E set for distribution to appropriate parties for review and comment. The process ensures that all parts of the PS&E are compatible, complete, and constructible.

12.4.10.B Procedure

Each Region has its own specific process, but the general procedure is similar. The PS&E Review PS&E set is distributed to the Bridge Project Support Engineer or the Bridge Specifications and Estimates Engineer assigned to the project. The review is performed, and comments returned to the Region, by the due date specified in the distribution document. Review comments are returned to both the Region Plan Reviewer and the Region Design PE Team Leader/Designer assigned to the project.

Depending on the scope of the project, and the Region responsible for the project, there may be a meeting to discuss review comments. If such a meeting is held (generally about halfway through the PS&E review period), the Bridge Specifications and Estimates Engineer and others from the Bridge Design Unit responsible for the project, should consider attending if discussion of Bridge PS&E review comments is likely.

Shortly after the specified due date for review comments passes, Region comments on the Bridge PS&E should be received by the Bridge Specifications and Estimates Engineer and/or the bridge designer(s) in the Bridge Design Unit. These review comments on the Bridge PS&E are addressed before the final Bridge PS&E is turned-in for AD Copy printing. The Bridge Specifications and Estimates Engineer makes all necessary revisions to the Bridge Cost Estimate and Bridge Special Provisions, and notifies the appropriate contacts in the Region Design PE Office and the Region Plans Office when these changes are complete. This should be completed at least two weeks prior to the scheduled Ad Date.

After the Bridge Design Unit has completed all necessary revisions to the Structure Plans, the Structure Plans are signed and turned in to the Bridge Specifications and Estimates Engineer. The Bridge AD-Ready PS&E shall include the following:

1. Copies of the signed plans ready for digital certification to be initiated by the Region's Certification Sheet process.
2. Final set of bridge special provisions and the associated Certified Bridge Special Provisions and Cost Estimate document stamped and signed by the Bridge Specifications and Estimates Engineer
3. Electronic copies of all CAD files in DGN format.

This set of Bridge AD-Ready PS&E is the "Signed PS&E Set" deliverable of the Structural Submittal Expectations Matrix, and is sent to the Region (Region Plan Reviewer and Region Design PE Team Leader/Designer) for use in compiling the AD Copy PS&E. The Bridge Construction Support Engineer is also included in this email distribution as notice of the AD-Ready status of the project. This should be completed two weeks prior to the scheduled Ad Date.

12.5 Appendices

Appendix 12.1-A1	Not Included In Bridge Quantities List
Appendix 12.2-A1	Bridge Quantities
Appendix 12.3-A1	Structural Estimating Aids Construction Costs
Appendix 12.3-A2	Structural Estimating Aids Construction Costs
Appendix 12.3-A3	Structural Estimating Aids Construction Costs
Appendix 12.3-A4	Structural Estimating Aids Construction Costs
Appendix 12.4-A1	Special Provisions Checklist
Appendix 12.4-A2	Structural Estimating Aids Construction Time Rates
Appendix 12.4-B1	Construction Working Day Schedule

Appendix 12.1-A1 Not Included In Bridge Quantities List

Washington State Department of Transportation

Not Included In Structure Quantities List

SR	Job Number	Project Title	
Designed By	Checked By	Date	Supervisor
Type of Structure			

The following is a list of items for which the Bridge and Structures Office is relying on the Region to furnish plans, specifications and estimates.

1.
2.
3.
4.
5.
6.
7.
8.
9.
10.
11.
12.
13.
14.
15.
16.
17.

DOT Form 230-038
Revised 07/2019

Appendix 12.2-A1 Bridge Quantities

Washington State Department of Transportation

Bridge Quantities

Bridge No. _____ Date _____

St. Item No.	Item Use	Item Description	Quantity	Unit of Measure
0001	Std. Item	Mobilization	_____	L.S.
0061	Std. Item	Removing Portion of Existing Bridge	_____	L.S.
0061		Type _____ Area SF/SM _____		
		Drilled Holes: Less than 12" long: Greater than 12" long:		
		Number **Diameter** **Number** **Diameter** **Length**		
		_____ _____ Inch _____ _____ Inch _____ LF		
		_____ _____ Inch _____ _____ Inch _____ LF		
		_____ _____ Inch _____ _____ Inch _____ LF		
		Core Drilled Holes: *Less than 12" long*: *Greater than 12" long:*		
		Number **Diameter** **Number** **Diameter** **Length**		
		_____ _____ Inch _____ _____ Inch _____ LF		
		_____ _____ Inch _____ _____ Inch _____ LF		
		_____ _____ Inch _____ _____ Inch _____ LF		
0071	Std. Item	Removing Existing Bridge	_____	L.S.
		Type _____ Area _____ SF		
0259	GSP Item	Work Access	_____	L.S.
		Type _____ Area _____ SF		
4001	GSP Item	Temporary Bridge	_____	L.S.
		Type _____ Area _____ SF/SM		
4006	Std. Item	Structure Excavation Class A Incl. Haul	_____	CY
		Dry (includes unsuitable if specified by Geotech Report		
		Pier **Soil**		
		_____ _____ CY		
		_____ _____ CY		
		_____ _____ CY		
		_____ _____ CY		
		Cofferdam:		
		Pier **Soil** **Rock**		
		_____ _____ CY _____ CY		
		_____ _____ CY _____ CY		
		_____ _____ CY _____ CY		
		_____ _____ CY _____ CY		
4010	Sp. Prov.	Special Excavation	_____	CY
		Pier **Soil**		
		_____ _____ CY		
		_____ _____ CY		
		_____ _____ CY		
		_____ _____ CY		

DOT Form 230-031
Revised 05/2017

Page 1 of 5

St. Item No.	Item Use	Item Description	Quantity	Unit of Measure
4013	Std. Item	Shoring or Extra Excavation Class A	_____	L.S.
		Dry:		
		AVERAGE OVERALL HEIGHT		
		Pier **<6 ft.** **6 ft. to 10 ft** **10 ft. to 20 ft*.** **>20 ft.***		
		_____ _____ SF _____ SF _____ SF _____ SF		
		_____ _____ SF _____ SF _____ SF _____ SF		
		_____ _____ SF _____ SF _____ SF _____ SF		
		_____ _____ SF _____ SF _____ SF _____ SF		
		COFFERDAM: AVERAGE OVERALL HEIGHT		
		PIER **<6 ft.** **6 ft. to10 ft** **0 ft. to 20 ft.*** **>20 ft.**		
		_____ _____ SF _____ SF _____ SF _____ SF		
		_____ _____ SF _____ SF _____ SF _____ SF		
		_____ _____ SF _____ SF _____ SF _____ SF		
		_____ _____ SF _____ SF _____ SF _____ SF		
		*INDICATE AVERAGE HEIGHT		
7070	GSP Item	Rock Bolt	_____	Each
7071	GSP Item	Rock Dowel Type	_____	Each
4008	Std. Item	Rock Excavation For Shaft Including Haul	_____	CY
Varies	Std. Item.	Constructing _____ FT. Diam. Shaft	_____	LF
Varies	Std. Item	Shaft - _____ In. Diameter		LF
4053	Std. Item	Furnishing Soldier Pile		LF
4160	Std. Item.	QA Shaft Test	_____	Each
0256	Std. Item	Removing Shaft Obstructions	_____	Est.
Varies	GSP Item	Preboring For _____ Pile	_____	LF
4060	Std. Item	Furnishing and Driving Concrete Test Pile	_____	Each
4070	Std. Item	Furnishing Conc. Piling - _____ Diameter	_____	LF
4080	Std. Item	Driving Conc. Pile		
4085	Std. Item	Furnishing and Driving Steel Test Pile	_____	Each
4090	Std. Item	Furnishing Steel Piling	_____	FM
4095	Std. Item	Driving Steel Pile	_____	Each
4100	Std. Item	Furnishing and Driving Timber Test Pile	_____	Each
4105	Std. Item	Furnishing Timber Piling - Untreated	_____	LF
4107	Std. Item	Furnishing Timber Piling _____	_____	LF
4108	Std. Item	Driving Timber Pile - Untreated	_____	Each
4111	Std. Item	Driving Timber Pile _____	_____	Each
4116	Std. Item	Pile Splice - Timber	_____	Each
8376	Std. Item	Furnishing Steel Pile Tip or Shoe	_____	Each
4130	Std. Item	Placing Prestressed Hollow Concrete Pile _____	_____	Each
4140	Std. Item	Driving Prestreessed Hollow Concrete Pile _____	_____	
--	Sp. Prov.	Pile Loading Test	_____	LF
		No. of Tests Each _____ Pile Size _____ Ton/Tonne		
4144	Std. Item	Epoxy-Coated St. Reinf. Bar For _____	_____	LB
4148	Std. Item	Epoxy-Coated St. Reinf Bar For Bridge	_____	LB
4149	Std. Item	St. Reinf. Bar For Bridge	_____	LB
4151	Std. Item	St. Reinf Bar for _____	_____	LB

DOT Form 230-031
Revised 05/2017

Page 2 of 5

St. Item No.	Item Use	Item Description	Quantity	Unit of Measure
4151	Std. Item	St. Reinf Bar for _____	_____	LB
--	Sp. Prov.	Wire Mesh _____	_____	SY
4166	Std. Item	Lean Concrete _____	_____	CY
--	Std. Item	Conc. Class _____	_____	CY
4322	Std. Item	Conc. Class 4000 for Bridge	_____	CY
4202	Std. Item	Conc. Class 4000 for _____	_____	CY
4200	Std. Item	Conc. Class 3000 for _____	_____	CY
4325	Std. Item	Conc. Class 5000 for Bridge	_____	CY
4205	Std Item	Conc. CLass 5000 for _____	_____	CY
4324	Std. Item	Conc. Class 4000W for Bridge	_____	CY
4204	Std. Item	Conc. Class 4000W for _____	_____	CY
--	GSP Item	Conc. Class EA	_____	CY
--	SP Prov.	Conc. Class HE	_____	CY
4230	Std. Item	Structural Carbon Steel	_____	LB
4235	Std. Item	Structural Low Alloy Steel	_____	LB
4240	Std. Item	Structural High Strength Steel	_____	LB
4246	Std. Item	Cast Steel	_____	LB
4251	Std. Item	Forged Steel	_____	LB
4256	Std. Item	Cast Iron	_____	LB
4261	Std. Item	Malleable Iron	_____	LB
4267	Std. Item	Ductile Iron	_____	LB
4271	Std. Item	Cast Bronze	_____	LB
4299	Std. Item	Lagging	_____	SF
4280	Std. Item	Timber and Lumber - Untreated	_____	MBM
4282	Std. Item	Timber and Lumber - Creosote Treated	_____	MBM
4284	Std. Item	Timber and Lumber - Slats Treated	_____	MBM
4300	Std. Item	Superstructure (for Concrete Bridges) Bridge Plan Area _____ SF	_____	L.S.
4311	Std. Item	Bridge Deck (for Steel Bridges) Bridge Plan Area _____ SF	_____	L.S.
6945	Std. Item	Conduit Pipe 2" Diam.	_____	LF
4410	Std. Item	Bridge Railing Type _____	_____	LF
4420	GSP Item	Bridge Grate Inlet	_____	Each
7169	Std. Item	Structural Earth Wall	_____	SF
--	Sp. Prov.	_____	_____	_____
--	Sp. Prov.	_____	_____	_____
5656	Std. Item	Bridge Approach Slab	_____	SY

DOT Form 230-031
Revised 05/2017

Breakdown of Items for Superstructure or Bridge Deck

St. Item No.	Item Use	Item Description	Quantity	Unit of Measure
--	Std. Item	Epoxy-Coated Steel Reinforcing Bar		LB
--	Std. Item	Epoxy-Coated Steel Reinforcing Bar (Traffic Barrier)		LB
--	Std. Item	Steel Reinforcing Bar		LB
--		Conc. Class _____		CY
--	Std. Item	Conc. Class 4000D		CY
--	Std. Item	Conc. Class 4000		CY
--	Std. Item	Conc. Class 5000		CY
--	Std. Item	Conc. Class _____ LS		CY
--	Std. Item	Structural Carbon Steel		LB
--	Std. Item	Structural Low Alloy Steel		LB
--	Std. Item	Structural High Strength Steel		LB
--	Std. Item	Cast Steel		LB
--	Std. Item	Cast Iron		LB
--	Std. Item	Malleable Iron		LB
--	Std. Item	Ductile Iron		LB
--	Std. Item	Cast Bronze		LB
--	Std. Item	Timber and Lumber - Untreated		MBM
--	Std. Item	Timber and Lumber - Creosote Treated		MBM
--	Std. Item	Timber and Lumber - Salts Treated		MBM
--	Sp. Prov.	Glulam Deck Panels		MBM
6945	Std. Item	Conduit Pipe 2" Diameter		LF
--	Std. Item	Bridge Railing Type _____		LF
--	Std. Item	Traffic Barrier		LF
4433	GSP. Item.	Modify Bridge Drain		Each
4434	GSP Item	Plugging Existing Bridge Drain		Each
4420	GSP Item	Bridge Grate Inlet		Each
Varies	GSP Item	Expansion Joint System		LF
		Type _____ Length _____ LF		
		Type _____ Length _____ LF		
		Type _____ Length _____ LF		
4444	GSP Item	Expansion Joint Modification		LF
		Type _____ Length _____ LF		
4232	Std. Item	Modified Concrete Overlay		CF
4233	Std. Item	Finishing and Curing Modified Concrete Overlay		SY
4456	Std. Item	Scarifying Concrete Surface		SY
	BSP Item	Polymer Concrete Overlay		SY
4465	Std. Item	Further Deck Preparation (for Type 1 Deck Repair)		SF
4467	Std. Item	Further Deck Preparation for Type 2 Deck Repair		SF
4451	Std. Item	Bridge Deck Repair Br No _____		SF
4455	Std. Item	Waterproof Membrame Br No _____		SY
5708	Std. Item	Removing Existing Overlay from Bridge Deck _____		SY
--	Sp. Prov.	Pot Bearing		Each
--	BSP Item	Disc Bearing		Each

DOT Form 230-031
Revised 05/2017

Page 4 of 5

--	BSP Item	Spherical Bearing	_____	Each
--	BSP Item	Cylindrical Bearing	_____	Each
--	Std. Item	Elastomeric Bering Pad (for pads only)	_____	Each
--	Sp., Prov.	Elastomeric Bearing Pad Assembly (for a fabricated assembly)	_____	Each
--	GSP Item	Fabric Pad Bearing	_____	Each
4269	Std. Item	Prestressed Conc. Girder _____	_____	LF
--	Std. Item	Prestressing	_____	LB
--	Sp. Prov.	Precast Segment	_____	LF
		Volume _____ CY/CM		
--	Sp. Prov.	_____	_____	_____
--	Sp. Prov.	_____	_____	_____

DOT Form 230-031
Revised 05/2017

Page 5 of 5

Appendix 12.3-A1 Structural Estimating Aids Construction Costs

Scoping Level Estimates

		UNIT COST [1,2,3,5]		
	UNIT	LOW	MEDIAN	HIGH [4]
Prestressed Concrete Girders (span 50 - 205 ft)				
Water Crossing w/ piling	SF	$300	$350	$400
Water Crossing w/ spread footings	SF	$300	$350	$400
Dry Crossing w/ piling	SF	$300	$350	$400
Dry Crossing w/ spread footings	SF	$250	$300	$350
Reinforced Concrete and Post-Tensioned Concrete Box Girders (span 50 - 200 ft)				
Water Crossing w/ piling	SF	$350	$400	$450
Water Crossing w/ spread footings	SF	$325	$375	$425
Dry Crossing w/ piling	SF	$350	$400	$450
Dry Crossing w/ spread footings	SF	$325	$375	$425
Reinforced Concrete Flat Slab (span 20 - 60 ft)	SF	$300	$325	$350
Prestressed Concrete Slabs (span 13 - 69 ft)	SF	$300	$350	$400
Prestressed Concrete Decked Bulb -Tee Girder (span 40 - 150 ft)	SF	$300	$350	$400
Steel Girder (span 60 - 400 ft)	SF	$350	$400	$400
Steel Box Girder (span 300 - 700 ft)	SF	-	$400	-
Steel Truss (span 300 - 700 ft)	SF	-	$450	-
Steel Arch (span 30 - 400 ft)	SF	-	$500	-
Pedestrian Bridge — Reinforced Concrete	SF	$400	$550	$700
Precast Reinforced Concrete Buried Structures	SF		(determined by Regions)	
Bridge Approach Slab	SY		$350	
Concrete Bridge Removal	SF	$25	$50	$75
Widening Existing Concrete Bridges [6]	SF	$350	$400	$450
Repl. Exist. Curbs and Barrier w/ Traffic Barrier (incl. removal)	LF	$220	$280	$350
Reinforced Concrete Retaining Wall (Exposed Area)	SF	$70	$90	$110
SE Wall — Welded Wire	SF	$35	$50	$70
SE Wall — Precast Conc. Panels or Conc. Block	SF	$40	$60	$80
SE Wall — CIP Conc. Fascia Panels (Special Design)	SF	$45	$55	$65
Permanent Geosynthic Wall w/ Shotcrete Facing	SF	$30	$40	$50
Permanent Geosynthic Wall w/ Concrete Fascia Panel	SF	$40	$50	$60
Soil Nail Wall	SF	$120	$150	$180
Shotcrete Facing	SF	$20	$30	$40
Concrete Fascia Panel	SF	$30	$40	$50
Soldier Pile Wall (Exposed Area)	SF	$125	$150	$170
Soldier Pile Tieback Wall (Exposed Area)	SF	$175	$200	$250
Concrete Crib Wall Concrete Headers	SF	$40	$50	$60

Typical Bridge Areas

- Bridge areas are computed as follows: Width x Length
- Width: Total width of Deck, including portion under the barrier.
- Length: Distance between back of pavement seats, or for a Bridge having Wingwalls, 3'-0" behind the top of the embankment slope; typically end of Wingwalls to end of Wingwalls.

Notes:

1. For any official WSDOT project cost estimate, contact the Bridge and Structures Office to discuss the specific project criteria and constructability related risks.
2. *SPECIAL NOTE*: These cost estimate aids may be effected by inflation, labor and equipment shortages, supply chain issues, and other environmental and economic factors that shold be evaluated at the time of estimate preparation.
3. Unit structure construction costs include mobilization but do not include sales tax, engineering, or contingency.
4. For small jobs (less than $100,000), use the high end of the cost range as a starting point.
5. Updated April, 2025. For the most recent bid history see the following resources:
   - Unit Bid Analysis: https://wsdot.wa.gov/engineering-standards/design-topics/engineering-applications
   - Bid Tabulation: https://wsdot.wa.gov/business-wsdot/contracts/about-public-works-contracts/public-works-contract-history
6. Widenings - Actual area of new construction. Includes removal.

Appendix 12.3-A2 Structural Estimating Aids Construction Costs

BID ITEM	UNIT	UNIT COST [1,2,3,5] LOW	HIGH [4]
Structure Excavation Class A Incl. Haul			
Earth	CY	$20	$45
Rock	CY	$150	$300
Inside Cofferdam — Earth	CY	$35	$50
Inside Cofferdam — Rock	CY	$170	$300
Shoring Extra Excavation Class A			
Dry — Depth under 6'	SF	$10	$15
Dry — 6' - 10'	SF	$15	$20
Dry — 10' - 20'	SF	$20	$25
Dry — > greater thabn 20'	SF	$25	$30
Cofferdam	SF	$50	$65
Preboring For Standard Piles	LF	$50	$65
Furnishing & Driving Test Piles			
Concrete	EACH	$7,500	$15,000
Steel	EACH	$4,000	$12,000
Timber	EACH	$2,000	$4,500
Furnishing Piling			
Conc. _____ Dia.	LF	$50	$70
Steel — TYP HP 12x53	LF	$55	$70
Timber — Creosote Treated	LF	$15	$20
Timber — Untreated	LF	$12	$15
** Pile Tip			
CIP Concrete (Steel Casing — Short Tip)	EACH	$300	$380
CIP Concrete (Steel Casing — 10 Stinger)	EACH	$7,000	$8,500
Steel (H-Pile)	EACH	$180	$340
Timber (Arrow Tip)	EACH	$60	$110
Driving Piles (40' - 70' Lengths)			
Concrete _____ Dia.	EACH	$750	$1,500
Steel	EACH	$525	$1,200
Timber	EACH	$320	$700
Shafts			
Constructing — Ft. Diam Shaft (4' to 6' Dia.)	LF	$850	$2,100
Constructing — Ft. Diam Shaft (8' to 12' Dia.)	LF	$2,100	$4,500
Rock Excavation For Shaft Including Haul	LF	$250	$1,500
QA Shaft Test	EACH	$1,000	$3,000
Removing Shaft Obstructions	EST	5% of all of above shaft ____	
St. Reinf. Bar For Bridge	LBS	$1.50	$2.00
Epoxy-Coated St. Reinf. Bar For Bridge	LBS	$1.50	$2.50
Conc. Class 4000W	CY	$500	$750
Conc. Class 4000 (Footings)	CY	$900	$1,300
Conc. Class 4000 (Abut. & Ret. Walls)	CY	$950	$1,350
Conc. Class 5000	CY	$1,000	$1,500
Lean Concrete	CY	$450	$600

Notes:

1. For any official WSDOT project cost estimate, contact the Bridge and Structures Office to discuss the specific project criteria and constructability related risks.
2. *SPECIAL NOTE*: These cost estimate aids may be effected by inflation, labor and equipment shortages, supply chain issues, and other environmental and economic factors that shold be evaluated at the time of estimate preparation.
3. Unit structure construction costs include mobilization but do not include sales tax, engineering, or contingency.
4. For small jobs (less than $100,000), use the high end of the cost range as a starting point.
5. Updated April, 2025. For the most recent bid history see the following resources:
   - Unit Bid Analysis: https://wsdot.wa.gov/engineering-standards/design-topics/engineering-applications
   - Bid Tabulation: https://wsdot.wa.gov/business-wsdot/contracts/about-public-works-contracts/public-works-contract-history

Appendix 12.3-A3 Structural Estimating Aids Construction Costs

BID ITEM	UNIT	UNIT COST [1,2,3,5] LOW	HIGH [4]
Elastomeric Bearing Pads			
Girder Seat	EACH	$250	$500
Girder Stop	EACH	$150	$250
Bearings - Spherical and Disc (In place with plates)	KIP	$20	$40
Fabric Pad Bearing - in place, including all plates, TFE, etc.	EACH	$3000	$4400
Wide Flange Prestressed Concrete Girder			
WF42G	LF	$550	
WF50G	LF	$575	
WF58G	LF	$600	
WF74G	LF	$625	
W83G	LF	$650	
W95G	LF	$675	
Spliced Prestressed Concrete I Girder			
WF74PTG	LF	$900	
W83PTG	LF	$1000	
W95PTG	LF	$1100	
Bulb Tee Girder			
WBT32G	LF	$375	
WBT38G	LF	$400	
WBT62G	LF	$425	
Trapezodial Tub Girder			
U54G4	LF	$750	
U54G5	LF	$760	
U54G6	LF	$770	
U66G4	LF	$780	
U66G5	LF	$790	
U66G6	LF	$800	
U78G4	LF	$810	
U78G5	LF	$820	
U78G6	LF	$830	
Wide Flange Trapezodial Tub Girder			
UF60G4	LF	$800	
UF60G5	LF	$810	
UF60G6	LF	$820	
UF72G4	LF	$830	
UF72G5	LF	$840	
UF72G6	LF	$850	
UF84G4	LF	$860	
UF84G5	LF	$870	
UF84G6	LF	$880	
Structural Carbon Steel (Steel girder, when large amount of steel is involved)	LBS	$2.75	$3.75
Structural Low Alloy Steel (Steel girder, when large amount of steel is involved)	LBS	$2.95	$3.95
Structural Steel (Sign supports, when small amounts of steel is involved)	LBS	$10.00	$15.00
Timber & Lumber	MBM	$2,000	$2,800
Creosote Treated	MBM	$2,250	$3,000
Salts Treated	MBM	$1,500	$2,000
Untreated	MBM	$1,750	$2,250
Lagging (in place) Treated	SF	$25	$40

Superstructure Cost		**UNIT COST** [1,2,3,5]	
Updated April 2025 [5]	**UNIT**	**LOW**	**HIGH** [4]
Expansion Joint Modification (Remove and Replace Headers Only - Add Exp. Jt. System Costs below)	LF	$500	$700
Expansion Joint System			
Compression Seal	LF	$150	$300
Modular	LF	$500	$7,000
Strip Seal	LF	$450	$900
Rapid Cure Silicone	LF	$75	$125
Bridge Drains	EACH	$600	$900
Bridge Grate Inlets	EACH	$2,300	$3,100
Conc. Class 5000	CY	$1,000	$1,500
Conc. Class 5000 (Segmental Constr.)	CY	$1,100	$1,500
Conc. Class 4000D (Deck Only)	CY	$1,000	$1,800
Conc. Class 4000	CY	$900	$1,500
St. Reinf. Bar	LBS	$150.00	$200.00
Epoxy-Coated St. Reinf. Bar	LBS	$150.00	$250.00
Post-tensioning Prestressing Steel (Includes Anchorages)	LBS	$750.00	$9.00
Traffic Barrier	LF	$3,350	$450
Bridge Railing Type BP & BP-S	LF	$150	$200
Beam Guardrail Type Thrie Beam	LF	$150	$250
Modified Conc. Overlay	CF	$35	$50
Furnishing and Curing Modified Conc. Overlay	SY	$40	$75
Scarifying Conc. Overlay (½-inch)	SY	$150	$190
Polymer Concrete	SY	$130	$160
Polyester Concrete	CF	$180	$250
Scarifying Concrete Overlay (2-inch or more)	SY	$200	$250
Removing Existing HMA Overlay From Bridge Deck			
Less Than 100 SY	SY	$70	$100
100 SY to 200SY	SY	$40	$60
Greater Than 200 SY	SY	$35	$60
Waterproof Membrane			
Less Than 100 SY	SY	$50	$60
100 SY to 200SY	SY	$40	$50
Greater Than 200 SY	SY	$35	$45

Notes:

1. For any official WSDOT project cost estimate, contact the Bridge and Structures Office to discuss the specific project criteria and constructability related risks.
2. *SPECIAL NOTE*: These cost estimate aids may be effected by inflation, labor and equipment shortages, supply chain issues, and other environmental and economic factors that shold be evaluated at the time of estimate preparation.
3. Unit structure construction costs include mobilization but do not include sales tax, engineering, or contingency.
4. For small jobs (less than $100,000), use the high end of the cost range as a starting point.
5. Updated April, 2025. For the most recent bid history see the following resources:
   - Unit Bid Analysis: https://wsdot.wa.gov/engineering-standards/design-topics/engineering-applications
   - Bid Tabulation: https://wsdot.wa.gov/business-wsdot/contracts/about-public-works-contracts/public-works-contract-history

Appendix 12.3-A4 Structural Estimating Aids Construction Costs

BID ITEM	UNIT	UNIT COST [1,2,3,5] LOW	HIGH [4]
Conduit Pipe 2" Diameter	LF	$35	$45
Sign Support (Brackets, Mono, or Truss Sign Bridges)	LBS	$10	$15
Concrete Surface Finishes			
Fractured Fin Finish	SY	$20	$30
Pigmented Sealer	SY	$15	$25
Painting Existing Steel Bridges	S.F.	$15	$45
Masonry Drilling (holes up to 1'-0" in depth)[6]			
1" Diameter	EACH	$30	
1 ½" Diameter	EACH	$35	
2" Diameter	EACH	$40	
2 ½" Diameter	EACH	$42	
3" Diameter	EACH	$44	
3 ½" Diameter	EACH	$46	
4" Diameter	EACH	$52	
5" Diameter	EACH	$54	
6" Diameter	EACH	$70	
7" Diameter	EACH	$90	
Removal of Rails and Curbs	LF	$90	$140
Removal of Rails, Curbs, and Slab	SF	$30	$60
Bridge Deck Repair	S.F.	$150	$350
Plugging Existing Bridge Drain	EACH	$350	
Mobilization	Sum of Items	10%	

Notes:

1. For any official WSDOT project cost estimate, contact the Bridge and Structures Office to discuss the specific project criteria and constructability related risks.
2. *SPECIAL NOTE*: These cost estimate aids may be effected by inflation, labor and equipment shortages, supply chain issues, and other environmental and economic factors that shold be evaluated at the time of estimate preparation.
3. Unit structure construction costs include mobilization but do not include sales tax, engineering, or contingency.
4. For small jobs (less than $100,000), use the high end of the cost range as a starting point.
5. Updated April, 2025. For the most recent bid history see the following resources:
   - Unit Bid Analysis: https://wsdot.wa.gov/engineering-standards/design-topics/engineering-applications
   - Bid Tabulation: https://wsdot.wa.gov/business-wsdot/contracts/about-public-works-contracts/public-works-contract-history
6. For holes greater than 1'-0" in depth and up to 20'-0" in depth, us 1.5 x unit cost. If drilling through steel reinforcing, add $16.00 per lineal inch of steel drilled.

Appendix 12.4-A1 Special Provisions Checklist

Washington State Department of Transportation

Special Provisions Checklist

SR	Job No.	Project Title		
Design By		Check By	Date	Supervisor
Type of Structure				

Instructions:
- ☒ Check items pertaining to this structure
- ☒ _____ Note other items with "X" in box and fill in blank line
- ☐ Leave blank if it **DOES NOT** pertain to this structure

A. Permits and Regulations
- ☐ Coast Guard
- ☐ _____

B. Railroads
- ☐ Railroad Bridge
- ☐ Railroad in Vicinity
- ☐ _____

C. Order of Work
- ☐ Approach embankment settlement period
- ☐ Stage construction sequence
- ☐ _____

D. Traffic Control
- ☐ Reduction in traffic lanes
- ☐ Traffic within _____ feet of new construction
- ☐ Traffic detoured, no traffic on bridge
- ☐ One way traffic on bridge
- ☐ _____

E. Utilities and Existing Pavement
- ☐ Utilities on Bridge, type _____
- ☐ Existing utilities in vicinity of construction
- ☐ Existing pavement in vicinity of construction
- ☐ _____

F. Falsework
- ☐ Falsework opening over existing roadway
- ☐ Falsework opening over railroad
- ☐ Falsework opening over water
- ☐ Protection of falsework
- ☐ Supported from existing structure
- ☐ Not supported from existing structure
- ☐ Special falsework release sequence required
- ☐ _____

DOT Form 230-037 EF
Revised 07/2011

G. Foundation

- ☐ Excavation near existing pavement
- ☐ Excavation near railroad track or facilities
- ☐ Concrete Seals
- ☐ Seal construction using a berm
- ☐ Cofferdams
- ☐ Pumping water from foundation excavation required
- ☐ Riprap at piers
- ☐ Removal of unsuitable material
- ☐ Rock excavation requiring threshold limit value
- ☐ Special Excavation
- ☐ _____

H. Forms

- ☐ Special forms for architectural treatment
- ☐ Fractured Fin Finish
- ☐ Variable depth random board finish
- ☐ 3/4 inch random board finish
- ☐ Remove forms from cells which have access (Box grider)
- ☐ _____

I. Piles

- ☐ Concrete test pile
- ☐ Concrete piling ____ inch diameter
- ☐ Steel test pile
- ☐ Steel piling _____
- ☐ Timber Test Pile
- ☐ Timber piling
- ☐ Pile loading test
- ☐ Pile minimum tip elevations
- ☐ Pile splice
- ☐ Pile tip
- ☐ Preboring for pile
- ☐ Driving piles in highly developed business or residential areas
- ☐ Excavation for pile
- ☐ Driving from existing structure
- ☐ No driving from existing structure
- ☐ Overdriving of piles
- ☐ _____

J. Shafts

- ☐ Required permanent casing
- ☐ Required temporary casing
- ☐ Casing shoring
- ☐ Shaft Seal
- ☐ CSL access tubes
- ☐ _____

DOT Form 230-037 EF
Revised 07/2011

K. Prestressed Concrete Griders

- ☐ Epoxy - coated prestressing steel
- ☐ Temporary strands
- ☐ f'c 28 days > 8,500 psi
- ☐ Precast prestressed member
- ☐ Spliced prestressed concrete girder
- ☐ Prestressed concrete tub girder
- ☐ _____

L. Superstructure

- ☐ Concrete class
- ☐ Post - tensioning tendons
- ☐ Elastomeric bearing pads (pad only)
- ☐ Elastomeric bearing pad assembly (fabricated assembly)
- ☐ Fabric pad bearing
- ☐ Disc bearing
- ☐ Spherical bearing
- ☐ Cylindrical bearing
- ☐ Electrical Conduit
- ☐ Expansion joint
- ☐ _____

M. Steel Structure

- ☐ Structural Carbon Steel
- ☐ Structural Low Alloy Steel
- ☐ Structural H.S. Steel
- ☐ Steel Casting
- ☐ A - 307 Fasteners
- ☐ M - 164 Fasteners
- ☐ F-1554 Fasteners
- ☐ Shop Assembling
- ☐ Notch Toughness Requirements
- ☐ Application of Paint - Color No. _____
- ☐ Steel Erection
- ☐ _____

N. Timber Structures

- ☐ Untreated
- ☐ Creosote treated
- ☐ Salt treated
- ☐ Glulam deck panels
- ☐ Type and grade of timber
- ☐ Fire prevention requirement needed
- ☐ _____

DOT Form 230-037 EF
Revised 07/2011

O. Signing and Lighting

- ☐ Navigation lighting system
- ☐ Temporary navigation light
- ☐ Sign bridge on structure
- ☐ Cantilever sign structure on bridge
- ☐ Bridge mounted sign brackets
- ☐ _____

P. Drainage System

- ☐ Special bridge drains
- ☐ Bridge grate inlets
- ☐ Downspout
- ☐ _____

Q. Surface Finish

- ☐ Fractured fin finish
- ☐ Sandblast finish
- ☐ Variable depth random board finish
- ☐ 3/4 inch random board finish
- ☐ Pigmented sealer
- ☐ _____

R. Special Classes of Concrete

- ☐ Concrete Class EA
- ☐ Concrete Class HE
- ☐ _____

S. Bridge Widening or Replacement

- ☐ Complete removal of existing structure
- ☐ Removing portions of existing structure
- ☐ Salvage Materials, storage site _____ , salvage item _____
- ☐ Coating contrete surface with epoxy resin
- ☐ Drilling holes
- ☐ Core drilled holes
- ☐ Set rebar with epoxy
- ☐ Use of rockbolts or rock anchors
- ☐ Grout, comp. strength _____ psi at ____ day, location _____
- ☐ As built Plans of existing structure available for bidder's inspection
- ☐ HMA overlay
- ☐ LMC overlay
- ☐ Polyester concrete overlay
- ☐ Bridge deck repair
- ☐ Further deck preparation
- ☐ Explosive prohibited
- ☐ Explosives allowed
- ☐ _____

DOT Form 230-037 EF
Revised 07/2011

T. Waterproofing

- ☐ Membrane waterproofing (Deck Seal)
- ☐ _____

U. Miscellaneous Items

- ☐ Temporary oak blocks
- ☐ Poured rubber
- ☐ Expaned polstyrene
- ☐ Plastic waterstops
- ☐ Expanded rubber
- ☐ Butyl rubber sheeting
- ☐ Grout, comp. strength ___ psi at _____ day, location _____
- ☐ Electrical conduit
- ☐ _____

V. Metal Bridge Railing

- ☐ Bridge Railing Type BP
- ☐ Bridge Railing Type _____
- ☐ _____

W. Repair Work

- ☐ Epoxy Crack Sealing
- ☐ Timber Redecking
- ☐ Concrete Deck Repair
- ☐ _____

X. Other Items

- ☐ Ceramic Tiles
- ☐ Sturctural Earth Wall
- ☐ Tieback Wall
- ☐ Noise Barrier Wall
- ☐ Winter Conditions
- ☐ Work Access
- ☐ Work hours or seasonal restrition
- ☐ Work Bridge
- ☐ Detour Bridge
- ☐ _____

DOT Form 230-037 EF
Revised 07/2011

Appendix 12.4-A2 Structural Estimating Aids Construction Time Rates

Operation	Units**	Min. Output	Ave. Output	Max. Output
Substructure				
Structure Exc. & Shoring	CY/DAY	20	80	150
*Seals	CY/DAY	10	15	20
*Footings	CY/DAY	6	10	14
*Abutment Walls	CY/DAY	4	7	19
*Wingwalls	CY/DAY	1	1.5	2
*Retaining Walls with Footings	CY/DAY	4	11	17
*Columns	CY/DAY	3	4	8
Falsework for X-beams	CY/DAY	4	10	13
*X-beams	CY/DAY	16	18	20
Furnishing Piles				
Precast Concrete	DAYS	40	30	20
Cast-in-Place Concrete	DAYS	15	5	2
Steel	DAYS	30	10	2
Timber	DAYS	20	5	2
Driving Piles				
Driving Test Piles	EACH/DAY	1	1	2
Concrete	LF/DAY	100	150	200
Steel	LF/DAY	100	150	200
Timber	LF/DAY	100	150	200
Shafts	DAYS	2	3	4
Soldier Pile Walls				
Driving Soldier Pile	DAYS	2	3	4
Permanent Ground Anchor	EACH	1	4	10
Timber Lagging	MBM/DAY	1	2	4
Concrete Fascia Panel	SF/DAY	100	800	1500
Soil Nail Walls				
Soil Nail	EACH	1	4	10
Shotcrete Facing	SF/DAY	1200	3000	6000
Superstructure				
Prestressed Girders				
Girder Fabrication	DAYS	70	45	35
Set Girders	LF/DAY	200	550	1,450
*Slab & Diaphragms	CY/DAY	6	11	18

*Concrete

**All times are based on a single crew with 8-hour work DAYS

Operation	Units**	Min. Output	Ave. Output	Max. Output
Box Girders				
Span Falsework	SF/DAY	150	700	900
*Bottom Slab	CY/DAY	3	8	11
*Webs, Diaphragms, and X-beams	CY/DAY	5	18	25
*Top Slab	CY/DAY	7	9	12
Stress and Grout Strands	LBS/DAY	4,500	6,000	8,000
Strip Falsework	SF/DAY	1,500	2,200	3,000
T-Beam				
Span Falsework	SF/DAY	500	700	1,000
*Girders, Diaphragms, and Slab	CY/DAY	6	10	15
Strip Falsework	SF/DAY	1,000	1,500	2,000
Flat Slab				
Span Falsework	SF/DAY	100	250	600
*Slab and X-beams	CY/DAY	6	10	15
Strip Falsework	SF/DAY	300	500	1,000
Steel Girder				
Girder Fabrication	DAYS	200	150	110
Girder Erection	LF/DAY	50	100	200
*Slab	CY/DAY	6	10	15
Painting	SF/DAY	1,000	2,000	3,000
Miscellaneous				
*Traffic Barrier	LF/DAY	20	40	80
*Traffic Railing & Sidewalk	LF/DAY	15	35	60
*SEW Traffic Barrier	LF/DAY	15	35	60
*Concrete Deck Overlay	SY/DAY	200	250	300
Expansion Joint Replacement	DAYS/LANE CLOSURE	8	6	4
Bridge Rail Retrofit	LF/DAY	50	100	200

* Concrete

** All times are based on a single crew with 8-hour work DAYS

Appendix 12.4-B1 Construction Working Day Schedule

