Chapter 10 Signs, Barriers, Approach Slabs, and Utilities

10.1 Sign and Luminaire Supports 10-1
10.1.1 Loads 10-1
10.1.1.A General 10-1
10.1.1.B Dead Loads 10-1
10.1.1.C Live Load 10-1
10.1.1.D Wind Loads 10-1
10.1.1.E Fatigue Design 10-2
10.1.1.F Ice and Snow Loads 10-2
10.1.1.G Group Load Combinations 10-2
10.1.1.H Impact Loads 10-3
10.1.2 Bridge Mounted Signs 10-3
10.1.2.A Vertical Clearance 10-3
10.1.2.B Geometrics 10-4
10.1.2.C Aesthetics 10-5
10.1.2.D Sign Placement 10-5
10.1.2.E Installation 10-6
10.1.2.F Installing/Replacing New Sign on Existing Bracket Supports 10-7
10.1.2.G Detailing 10-7
10.1.3 Monotube Sign Structures Mounted on Bridges 10-7
10.1.3.A Design Loads 10-7
10.1.3.B Vertical Clearance 10-8
10.1.3.C Geometrics 10-8
10.1.4 Monotube Sign Structures 10-8
10.1.4.A Sign Bridge Conventional Design 10-8
10.1.4.B Cantilever Conventional Design 10-8
10.1.4.C Balanced Cantilever Conventional Design 10-10
10.1.4.D VMS Installation 10-10
10.1.4.E Monotube Sheet Guidelines 10-11
10.1.4.F Monotube Quantities 10-11
10.1.5 Foundations 10-12
10.1.5.A Monotube Sign Structure Foundation Types 10-12
10.1.5.B Luminaire, Signal Standard, and Camera Pole Foundation Types 10-12
10.1.5.C Foundation Design 10-12
10.1.5.C.1 Monotube Sign Structures Foundation Type 1 Design 10-13
10.1.5.C.2 Monotube Sign Structures Foundation Type 2 and 3 . 10-13
10.1.5.C.3 Monotube Sign Structures Non-Conventional Design Foundations 10-13
10.1.5.C.4 Signal Foundation Design 10-13
10.1.5.D Foundation Quantities 10-14

10.2 Structures Traffic Barrier. 10-15
10.2.1 General Guidelines. 10-15
10.2.2 Bridge Railing Test Levels 10-19
10.2.3 Available WSDOT Designs 10-19
10.2.3.A Service Level 1 (SL-1) Weak Post Guardrail (TL-2) 10-19
10.2.3.B Texas T-411 Aesthetic Concrete Baluster (TL-2). 10-20
10.2.3.C Traffic Barrier – 32″ F-Shape (TL-3) 10-20
10.2.3.D Traffic Barrier – 34″ Single Slope (TL-3). 10-21
10.2.3.E Pedestrian Barrier (TL-3). 10-21
10.2.3.F Oregon 3-Tube Curb Mounted Traffic Barrier (TL-4) 10-22
10.2.3.G Traffic Barrier – 42″ and 45" F-Shape (TL-4 and TL-5) 10-22
10.2.3.H Traffic Barrier – 42″ and 45” Single Slope (TL-4 and TL-5) 10-23
10.2.4 Design Criteria 10-24
10.2.4.A Design Values 10-24
10.2.4.B Geometry. 10-25
10.2.4.C Standard Detail Sheet Modifications 10-26
10.2.4.D Miscellaneous Design Information 10-27
10.3 At Grade Concrete Barriers 10-29
10.3.1 General Guidelines. 10-29
10.3.2 Differential Grade Concrete Barriers 10-30
10.3.2.A Differential Grade Concrete Barriers 10-30
10.3.3 Moment Slab Traffic Barrier 10-31
10.3.3.A General 10-31
10.3.3.B Guidelines for Moment Slab Design 10-32
10.3.3.B.1 Structural Capacity 10-32
10.3.3.B.2 Global Stability. 10-32
10.3.3.B.3 Minimum and Maximum Dimensions. 10-32
10.3.3.B.4 Sliding of the Barrier 10-33
10.3.3.B.5 Overturning of the Barrier 10-34
10.3.3.C Guidelines for the Soil Reinforcement 10-34
10.3.3.D Design of the Wall Panel. 10-34
10.3.4 Precast Concrete Barrier. 10-34
10.3.4.A Concrete Barrier Type F and Type 2 10-34
10.3.4.B Concrete Barrier Type F Narrow Base and Concrete Barrier Type 4 . 10-35
10.3.5 Miscellaneous Items 10-35

10.4 Bridge Traffic Barrier Rehabilitation . . . 10-36
10.4.1 Policy . . . 10-36
10.4.2 Guidelines . . . 10-36
10.4.3 Design Criteria . . . 10-37
10.4.4 WSDOT Bridge Inventory of Bridge Rails . . . 10-38
10.4.5 Available Retrofit Designs . . . 10-38
10.4.5.A Washington Thrie Beam Retrofit of Concrete Balusters . . . 10-38
10.4.5.B Delaware Thrie Beam Guardrail . . . 10-38
10.4.5.C Concrete Parapet Retrofit . . . 10-38
10.4.5.D SL-1 Weak Post . . . 10-39
10.4.6 Available Replacement Designs . . . 10-39
10.4.6.A Traffic Barrier – Shape F Retrofit . . . 10-39
10.5 Bridge Railing . . . 10-40
10.5.1 Design . . . 10-40
10.5.2 Railing Types . . . 10-40
10.5.2.A Bridge Pedestrian Railing Type BP-10 . . . 10-40
10.5.2.B Bridge Pedestrian Railing Type BP-22 . . . 10-40
10.5.2.C Bridge Pedestrian Railing Type BP-12 . . . 10-40
10.5.2.D Bridge Pedestrian Railing Type BP-54 . . . 10-41
10.5.2.E Bridge Railing Type Snow Fence . . . 10-41
10.5.2.F Bridge Railing Type Chain Link Fence . . . 10-41
10.6 Bridge Approach Slabs . . . 10-42
10.6.1 Notes to Region for Preliminary Plan . . . 10-43
10.6.2 Bridge Approach Slab Design Criteria . . . 10-43
10.6.3 Bridge Approach Slab Detailing . . . 10-44
10.6.4 Skewed Bridge Approach Slabs . . . 10-44
10.6.5 Approach Anchors and Expansion Joints . . . 10-46
10.6.6 Bridge Approach Slab Addition or Retrofit to Existing Bridges . . . 10-46
10.6.7 Bridge Approach Slab Staging . . . 10-48
10.7 Traffic Barrier on Bridge Approach Slabs . . . 10-49
10.7.1 Bridge Approach Slab over Wing Walls, Cantilever Walls or Geosynthetic Walls . . . 10-49
10.7.2 Bridge Approach Slab over SE Walls . . . 10-51
10.8 Utilities Installation on New and Existing Structures . . . 10-52
10.8.1 General Concepts . . . 10-52
10.8.1.A Responsibilities of the Utility Company . . . 10-52
10.8.1.B Confined Spaces . . . 10-52
10.8.1.C Coating and Corrosion Protection . . . 10-52
10.8.2 Utility Design Criteria . . . 10-55
10.8.2.A Utility Location . . . 10-55
10.8.2.B Termination at the Bridge Ends . . . 10-55
10.8.2.C Utility Expansion . . . 10-56

10.8.2.D Utility Blockouts . . . 10-56
10.8.2.E Gas Lines or Volatile Fluids . . . 10-56
10.8.2.F Water Lines . . . 10-56
10.8.2.G Sewer Lines . . . 10-57
10.8.2.H Electrical (Power and Communications) . . . 10-57
10.8.3 Box/Tub Girder Bridges . . . 10-57
10.8.4 Traffic Barrier Conduit . . . 10-58
10.8.5 Conduit Types . . . 10-58
10.8.6 Utility Supports . . . 10-58
10.8.6.A Pipe Hangers . . . 10-59
10.8.6.B Surface Mounting . . . 10-59
10.9 Review Procedure for Utility Installations on Existing Structures . . . 10-60
10.9.1 Utility Review Checklist . . . 10-61
10.10 Anchors for Permanent Attachments . . . 10-62
10.11 Drainage Design . . . 10-63
10.11.1 Geometrics . . . 10-63
10.11.2 Hydrology . . . 10-63
10.11.3 On Bridge Systems . . . 10-63
10.11.3.A Design . . . 10-63
10.11.3.B Cast Iron/Ductile Iron Drain and Drainpipes . . . 10-64
10.11.3.C Fiberglass-Reinforced Plastic (FRP) Drainpipe . . . 10-65
10.11.3.D Plan Sheet Development . . . 10-67
10.11.4 Construction . . . 10-67
10.12 Bridge Security . . . 10-68
10.12.1 General . . . 10-68
10.12.2 Design . . . 10-68
10.12.3 Design Criteria . . . 10-69
10.13 Temporary Bridges . . . 10-70
10.13.1 General . . . 10-70
10.13.2 Structural Design Requirements . . . 10-70
10.13.2.A Deck Design . . . 10-70
10.13.2.B Traffic Barrier Design . . . 10-70
10.13.2.C Superstructure Design . . . 10-71
10.13.2.D Seismic Design . . . 10-71
10.13.2.E Foundation Design . . . 10-71
10.13.3 NBI Requirements . . . 10-71
10.14 Bridge Standard Drawings . . . 10-72
10.99 References . . . 10-75

10.1 Sign and Luminaire Supports

10.1.1 Loads

10.1.1.A General

The reference used in developing the following office criteria is the AASHTO LRFD *Standard Specifications for Structural Supports for Highway Signs, Luminaires, and Traffic Signals*, First Edition dated 2015 (including latest interims), and shall be the basis for analysis and design.

10.1.1.B Dead Loads

Sign:
(Including panel and wind beams; does not include vert. bracing) 3.25 lbs/ft^2
Luminaire (effective projected area of head = 3.3 sq ft) 60 lbs/each
Fluorescent Lighting 3.0 lbs/ft
Standard Signal Head 60 lbs/each
Mercury Vapor Lighting 6.0 lbs/each/
inch of length
Sign BracketsCalc.
Structural MembersCalc.
5 foot wide maintenance walkway:
(Including mounting brackets and handrail) 160 lbs/ft
Signal Head w/3 lenses:
(Effective projected area with backing plate = 9.2 sq ft) 60 lbs/each

10.1.1.C Live Load

A live load consisting of a single load of 500 lb distributed over 2.0 feet transversely to the member shall be used for designing members for walkways and platforms. The load shall be applied at the most critical location where a worker or equipment could be placed, see AASHTO 2015, Section 3.6.

10.1.1.D Wind Loads

A 3 second gust wind speed shall be used in the AASHTO wind pressure equation. The 3 second wind gust map in AASHTO is based on the wind map in ANSI/ASCE 7-16.

Basic wind speed of 115 mph shall be used in computing design wind pressure using equation 3.8.1-1 of AASHTO Section 3.8.1. This is based on the high risk category with a mean recurrence interval of 1700 years per AASHTO Table 3.8-1.

The Alternate Method of Wind Pressures given in Appendix C of the AASHTO 2015 Specifications shall not be used.

10.1.1.E Fatigue Design

Fatigue design shall conform to AASHTO Section 11 with the exception of square and rectangular tube shape. AASHTO does not provide fatigue calculations for shapes with less than 8 sides. Therefore, calculating the Constant Amplitude Fatigue Threshold, D_T (Table 11.9.3.1-2, AASHTO 2015) was taken to be the larger outer flat to flat distance of the rectangular tube. Fatigue Categories are listed in Table 11.6-1. Overhead Cantilever and Bridge Sign and signal structures, high-mast lighting towers (HMLT), poles, and bridge mounted sign brackets shall conform to the following fatigue categories.

Fatigue Category I: Overhead cantilever sign structures (maximum span of 35 feet and no VMS installation), overhead sign bridge structures, high-mast lighting towers 55 feet or taller in height, bridge-mounted sign brackets, and all signal bridges. Gantry or pole structures used to support sensitive electronic equipment (tolling, weigh-in-motion, transmitter/receiver antennas, transponders, etc.) shall be designed for Fatigue Category I, and shall also meet any deflection limitations imposed by the electronic equipment manufacturers.

Fatigue Category II: For structures not explicitly falling into Category I or III.

Fatigue Category III: Lighting poles less than 55 feet in height with rectangular or square cross sections, or non-tapered round cross sections, and overhead cantilever traffic signals (maximum cantilever length 65 feet).

Sign bridges, cantilever sign structures, signal bridges, and overhead cantilever traffic signals mounted on bridges shall be either attached to substructure elements (e.g., crossbeam extensions) or to the bridge superstructure at pier locations. Mounting these features to bridges as described above will help to avoid resonance concerns between the bridge structure and the signing or signal structure.

CCTV camera pole shall meet deflection criteria specified on Standard Plan J-29-15 for fixed base.

The “XYZ” limitation shown in Table 10.1.4-2 shall be met for Monotube Cantilevers. The “XYZ” limitation consists of the product of the sign area (XY) and the arm from the centerline of the posts to the centerline of the sign (Z). See Appendix 10.1-A2-1 for details.

10.1.1.F Ice and Snow Loads

A 3 psf ice load may be applied around all the surfaces of structural supports, horizontal members, and luminaires, but applied to only one face of sign panels (Section 3.7, AASHTO 2015).

Walk-through VMS shall not be installed in areas where appreciable snow loads may accumulate on top of the sign, unless positive steps are taken to prevent snow build-up.

10.1.1.G Group Load Combinations

Sign, luminaire, and signal support structures are designed using the load factors from Table 3.4-1, AASHTO 2015 (including latest interims).

10.1.1.H Impact Loads

Vehicle impact loads shall be applied to sign, luminaire and traffic signal foundations that are integrated into roadside traffic barriers. The vehicle impact loads shall be applied at the height specified for intended test levels in accordance with the AASHTO LRFD-BDS Section 13 Table A13.2-1 "Design Forces For Traffic Railing (32-inch for TL-4 and 42-inch for TL-5) as modified by Section 10.2.4."

Structural supports for signs, luminaires and traffic signals are normally not designed for the application of vehicle impact loads (with the exception of pole or post-type supports on break-away bases).

10.1.2 Bridge Mounted Signs

10.1.2.A Vertical Clearance

All new signs mounted on bridge structures shall be positioned such that the bottom of the sign or lighting bracket does not extend below the bottom of the bridge as shown in Figure 10.1.2-1. The position of the sign does not need to allow for the future placement of lights below the sign. If lights are to be added in the future they will be mounted above the sign. To ensure that the bottom of the sign or lighting bracket is above the bottom of the bridge, the designer shall maintain at least a nominal 2 inch dimension between the bottom of the sign or lighting and the bottom of the bridge to account for construction tolerances and bracket arm sag.

Figure 10.1.2-1 Sign Vertical Clearance

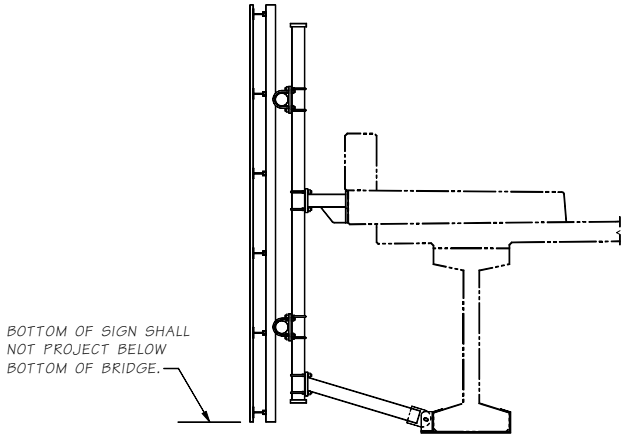

10.1.2.B Geometrics

1. Signs shall be installed at approximate right angles to approaching motorists. For structures above a tangent section of roadway, signs shall be designed to provide a sign skew within 5° from perpendicular to the lower roadway (see Figure 10.1.2-2).

Figure 10.1.2-2 Sign Skew on Tangent Roadway

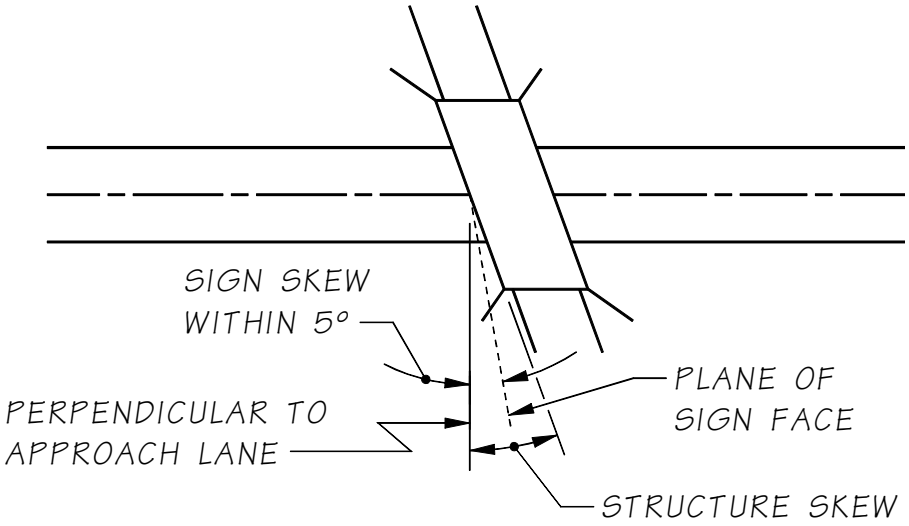

2. For structures located on or just beyond a horizontal curve of the lower roadway, signs shall be designed to provide a sign chord skew within 5° from perpendicular to the chord-point determined by the approach speed (see Figure 10.1.2-3).

Figure 10.1.2-3 Sign Skew on Curved Roadway

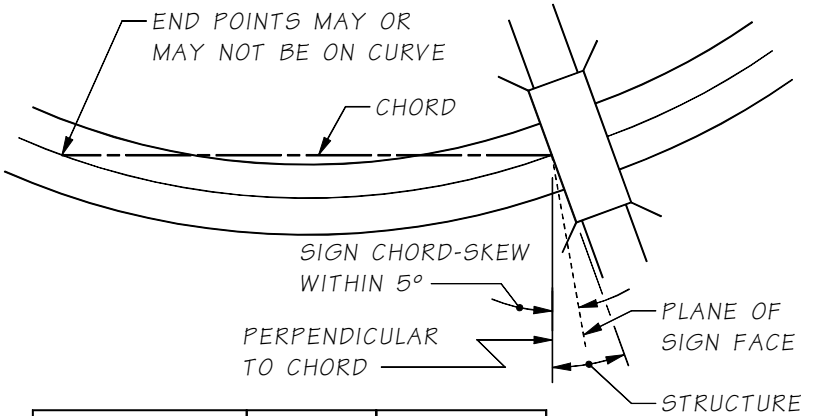

SPEED LIMIT	35 MPH OR LESS	MORE THAN 35 MPH
CHORD LENGTH	300'	500'

3. The top of the sign shall be level. Maximum sign height shall be decided by the Region. If the structure is too high above the roadway, then the sign shall not be placed on the structure (see Figure 10.1.2-4).

Figure 10.1.2-4

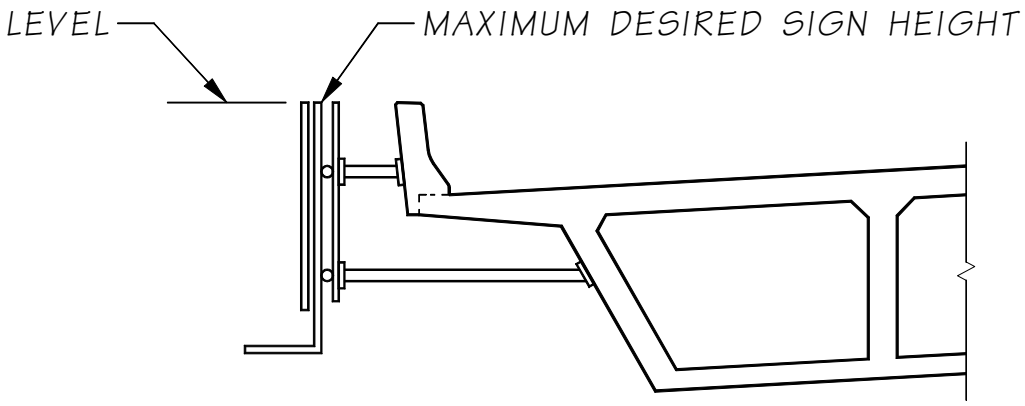

10.1.2.C Aesthetics

1. The support structure shall not extend beyond the limits of the sign unless the extension is unavoidable.
2. The sign support shall be detailed in such a manner that will permit the sign and lighting bracket to be installed level.
3. When the sign support will be exposed to view, special consideration is required in determining member sizes and connections to provide as pleasing an appearance as possible.

10.1.2.D Sign Placement

1. Signs shall not be placed under bridge overhangs. This causes partial shading or partial exposure to the elements and problems in lifting the material into position and making the required connections. Signs shall never be placed directly under the drip-line of the structure. These conditions may result in uneven fading, discoloring, and difficulty in reading.

2. A minimum of 2 inches of clearance shall be provided between back side of the sign support and edge of the bridge. See Figure 10.1.2-5.

Figure 10.1.2-5 Sign Horizontal Location

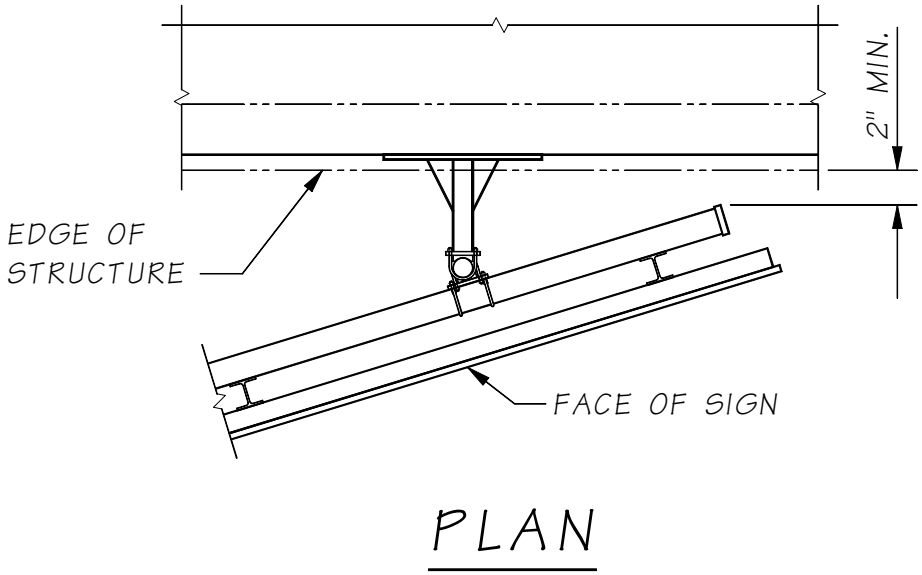

3. Bridge mounting of wide sign panels on bridges with significant skew will result in excessive bracket arm length. Sign panel width/skew combinations that result in excessive arm lengths shall not be used. Top arm lengths exceeding 7'-0", or any arm length with load demands exceeding the capacity of a 4" diameter standard pipe are considered excessive.
4. VMS units shall not be installed on bridge mounted sign brackets.

10.1.2.E Installation

1. Adhesive anchors or cast-in-place ASTM F593 Type 304, Group 1 Condition CW, anchor rods shall be used to install the sign brackets on the structure. Size and minimum installation depth shall be given in the plans or specifications. The adhesive anchors shall be installed normal to the concrete surface. Adhesive anchors shall not be placed through the webs or flanges of prestressed or post-tensioned girders unless approved by the WSDOT State Bridge Design Engineer. Adhesive anchors shall not be used at overhead locations other than with horizontal hole/anchor alignment.
2. Bridge mounted sign structures shall not be placed on bridges with steel superstructures unless approved by the WSDOT State Bridge Design Engineer.

10.1.2.F Installing/Replacing New Sign on Existing Bracket Supports

When installing a new sign on existing bracket supports, the following shall be required:

1. All hardware shall be replaced per the current *Standard Specifications*.
2. The new sign area shall not exceed the original designed sign area.
3. The inspection report for the bracket shall be reviewed to ensure that the supports are in good condition. If there is not an inspection report, then an inspection shall be performed on the bracket.

10.1.2.G Detailing

For standard bridge mounted sign bracket details see Bridge Standard Drawings 10.1-A6-1 to 10.1-A6-5. All information shown in the Layout (Bridge Standard Drawing 10.1-A6-1) shall be included on the contract plans. This is provided to allow WSDOT sign inspectors to locate and identify the sign and bridge with the as-built layout. When attaching the lower bracket arm to concrete I-girders, concrete, box/tub girders, or steel I-girders, use Bridge Standard Drawing 10.1-A6-4A, 10.1-A6-4B, or 10.1-A6-4C, respectively.

10.1.3 Monotube Sign Structures Mounted on Bridges

10.1.3.A Design Loads

Design loads for the supports of the Sign Bridges shall be calculated based on assuming a 12-foot-deep sign over the entire roadway width, under the sign bridge, regardless of the sign area initially placed on the sign bridge. For Cantilever design loads, guidelines specified in Section 10.1.1 shall be followed. The design loads shall follow the same criteria as described in Section 10.1.1. Loads from the sign bridge shall be included in the design of the supporting bridge.

In cases where a sign structure is mounted on a bridge, the sign structure, from the anchor bolt group and above, shall be designed to AASHTO LRFD *Standard Specifications for Structural Supports for Highway Signs, Luminaires, and Traffic Signals* First Edition, dated 2015 including interims. The concrete, the anchor bolt group, and the connecting elements to the bridge structure shall be designed to the specifications in this manual and AASHTO LRFD. The loads calculated from the AASHTO LRFD Specifications for Structural Supports for Signs, Luminaires and Traffic Signals (AASHTO SLTS) shall be considered as Service Loads (LF =1.0). These Service Loads shall be factored as required for the Strength and Extreme Limit States described in AASHTO LRFD Table 3.4.1-1, and used for design of sign structure foundation elements incorporated into new structures. For sign structure foundation elements attached to older structures originally designed using Allowable Stress Design, the loads calculated using AASHTO SLTS may be considered as Service Loads.

10.1.3.B Vertical Clearance

Vertical clearance for Monotube Sign Structures shall be 20′-0″ minimum from the bottom of the lowest sign to the highest point in the traveled lanes. See Appendix 10.1-A1-1, 10.1-A2-1, and 10.1-A3-1 for sample locations of Minimum Vertical Clearances.

10.1.3.C Geometrics

Sign structures shall be placed at approximate right angles to approaching motorists. Dimensions and details of sign structures are shown in Appendix 10.1-A1-1, 10.1-A1-2, and 10.1-A1-3 and 10.1-A2-1, 10.1-A2-2, and 10.1-A2-3. When maintenance walkways are included, refer to Standard Plans G-95.10, G-95.20, G-95.30.

10.1.4 Monotube Sign Structures

10.1.4.A Sign Bridge Conventional Design

Table 10.1.4-1 provides the conventional structural design information to be used for a Sign Bridge Layout, Bridge Standard Drawing 10.1-A1-1; along with the Structural Detail sheets, which are Bridge Standard Drawing 10.1-A1-2 and Bridge Standard Drawing 10.1-A1-3; General Notes, Bridge Standard Drawing 10.1-A5-1; and Miscellaneous Details, Bridge Standard Drawing 10.1-A5-2.

10.1.4.B Cantilever Conventional Design

Table 10.1.4-2 provides the conventional structural design information to be used for a Cantilever Layout, Bridge Standard Drawing 10.1-A2-1; along with the Structural Detail sheets, which are Bridge Standard Drawing 10.1-A2-2 and Bridge Standard Drawing 10.1-A2-3; General Notes, Bridge Standard Drawing 10.1-A5-1; and Miscellaneous Details, Bridge Standard Drawing 10.1-A5-2.

Table 10.1.4-1 Standard Monotube Sign Bridges

SPAN LENGTH	POSTS Ⓥ				BEAM A Ⓥ				BEAM B Ⓥ				BEAM C Ⓥ				BEAM D Ⓥ				CAMBER
"S"	"H"	"A"	"B"	"T1"	"L1"	"B"	"C"	"T2"	"L2"	"B"	"C"	"T2"	"L3"	"B"	"C"	"T2"	"L3"	"B"	"C"	"T2"	
LESS THAN 60'-0"	30'-0" OR LESS	1'-6"	2'-0"	½"	6'-0"	2'-0"	2'-0"	½"	0'-0"	2'-0"	2'-0"	½"	13'-0" TO 48'-0"	2'-0"	2'-0"	½"	-	-	-	-	2¾"
60'-0" TO 75'-0"	30'-0" OR LESS	1'-6"	2'-3"	⅝"	6'-0"	2'-3"	2'-0"	⅝"	9'-0" TO 14'-0"	2'-3"	2'-0"	⅝"	30'-0" TO 35'-0"	2'-3"	2'-0"	⅝"	-	-	-	-	3¾"
+75'-0" TO 90'-0"	30'-0" OR LESS	1'-6"	2'-3"	⅝"	6'-0"	2'-3"	2'-0"	⅝"	14'-0" TO 19'-0"	2'-3"	2'-0"	⅝"	35'-0" TO 40'-0"	2'-3"	2'-0"	⅝"	-	-	-	-	5"
+90'-0" TO 105'-0"	30'-0" OR LESS	1'-9"	2'-6"	⅝"	6'-0"	2'-6"	2'-3"	⅝"	19'-0" TO 26'-6"	2'-6"	2'-3"	⅝"	40'-0"	2'-6"	2'-3"	⅝"	-	-	-	-	6"
+105'-0" TO 120'-0"	30'-0" OR LESS	1'-9"	2'-6"	⅝"	6'-0"	2'-6"	2'-3"	⅝"	16'-6" TO 34'-0"	2'-6"	2'-3"	⅝"	40'-0"	2'-6"	2'-3"	⅝"	-	-	-	-	7½"
+120'-0" TO 135'-0"	30'-0" OR LESS	2'-0"	2'-8"	⅝"	6'-0"	2'-8"	2'-8"	⅝"	34'-0" TO 41'-6"	2'-8"	2'-8"	⅝"	40'-0"	2'-8"	2'-8"	⅝"	-	-	-	-	8½"
+135'-0" TO 150'-0"	30'-0" OR LESS	2'-0"	2'-8"	⅝"	6'-0"	2'-8"	2'-8"	⅝"	41'-6" TO 49'-0"	2'-8"	2'-8"	⅝"	40'-0"	2'-8"	2'-8"	⅝"	-	-	-	-	10½"
+150'-0" TO 165'-0"	30'-0" OR LESS	2'-0"	2'-8"	¾"	6'-0"	2'-8"	2'-8"	⅝"	27'-0"	2'-8"	2'-8"	⅝"	18'-5" TO 25'-6"	2'-8"	2'-8"	⅝"	48'-0"	2'-8"	2'-8"	⅝"	13¾"
+165'-0" TO 180'-0"	30'-0" OR LESS	2'-0"	2'-8"	¾"	6'-0"	2'-8"	2'-8"	⅝"	30'-0"	2'-8"	2'-8"	⅝"	22'-6" TO 30'-0"	2'-8"	2'-8"	⅝"	48'-0"	2'-8"	2'-8"	⅝"	15¾"

SPAN LENGTH	POST BASE Ⓥ					BOLTED SPLICE #1 L1 TO L2 AND L1 TO L3						BOLTED SPLICE #2 L2 TO L3						BOLTED SPLICE #3 L3 TO L4						MAXIMUM SIGN AREA
"S"	"D1"	S5	"S6"	"T3"	"T6"	"S1"	"S2"	"S3"	"S4"	T4	"T5"	"S1"	"S2"	"S3"	S4	"T4"	"T5"	"S1"	"S2"	"S3"	"S4"	"T4"	"T5"	
LESS THAN 60'-0"	1½"	4	4	3"	¾"	5	-	5	-	2"	⅝"	-	-	-	-	-	-	-	-	-	-	-	-	600 SQ. FT.
60'-0" TO 75'-0"	1¾"	4	4	3"	¾"	6	-	5	-	2"	⅝"	6	-	5	-	2¼"	¾"	-	-	-	-	-	-	700 SQ. FT.
+75'-0" TO 90'-0"	1¾"	4	4	3"	¾"	6	-	5	-	2"	⅝"	6	-	5	-	2¼"	¾"	-	-	-	-	-	-	800 SQ. FT.
+90'-0" TO 105'-0"	1¾"	4	5	3"	1"	7	-	6	-	2"	⅝"	7	5	6	4	2½"	1"	-	-	-	-	-	-	900 SQ. FT.
+105'-0" TO 120'-0"	1¾"	4	5	3"	1"	7	-	6	-	2"	⅝"	7	5	6	4	2½"	1"	-	-	-	-	-	-	900 SQ. FT.
+120'-0" TO 135'-0"	2"	4	5	3"	1"	7	5	7	5	2"	⅝"	7	5	7	5	2½"	1"	-	-	-	-	-	-	900 SQ. FT.
+135'-0" TO 150'-0"	2"	4	5	3"	1"	7	5	7	5	2"	⅝"	7	5	7	5	2½"	1"	-	-	-	-	-	-	900 SQ. FT.
+150'-0" TO 180'-0"	2"	4	5	3"	1"	7	5	7	5	2"	⅝"	7	5	7	5	2½"	1"	7	5	7	5	2½"	1"	900 SQ. FT.

Ⓥ DENOTES MAIN LOAD CARRYING TENSILE MEMBERS OR TENSION COMPONENTS OF FLEXURAL MEMBERS.

Table 10.1.4-2 Standard Monotube Cantilevers

Span Length	Posts ¦				Beam A ¦				Beam B ¦				
"S"	"H"	"A"	"B"	"T1"	"L1"	"B"	"C"	"T2"	"L2"	"B"	"C"	"T2"	Camber
Less Than 20'-0"	30'-0" or Less	1'-6"	2'-0"	½"	6'-0"	2'-0"	2'-0"	½"	14'-0"	2'-0"	2'-0"	½"	2"
20'-0" to 35'-0"	30'-0" Or Less	1'-6"	2'-0"	½"	6'-0"	2'-0"	2'-0"	½"	14'-0" TO 29'-0"	2'-0"	2'-0"	½"	3½"

Span Length	Post Base ¦					Bolted Splice						Maximums		
"S"	"D1"	"S5"	"S6"	"T3"	"T6"	"S1"	"S2"	"S3"	"S4"	"T4"	"T5"	Sign Area	"XYZ"	"Z"
Less Than 20'-0"	1½"	4	4	2"	¾"	5	-	5	-	2"	⅝"	194 SQ. FT.	2920 C.F.	15'-0"
20'-0" to 30'-0"	2"	4	4	3"	¾ "	5	3	5	3	2½"	⅝"	330 SQ. FT.	5363 C.F.	20'-0"
+30'-0" to 35'-0"	2"	4	4	3"	¾ "	5	3	5	3	2½"	⅝"	235 SQ. FT.	5924 C.F.	25'-0"

¦ ***Note:*** Denotes Main Load Carrying Tensile Members Or Tension Components Of Flexural Members.

10.1.4.C Balanced Cantilever Conventional Design

Bridge Standard Drawing 10.1-A3-1; along with the Structural Detail sheets, Bridge Standard Drawing 10.1-A3-2 and 10.1-A3-3, General Notes, Bridge Standard Drawing 10.1-A5-1; and Miscellaneous Details, Bridge Standard Drawing 10.1-A5-2, provides the conventional structural design information to be used for a Balanced Cantilever Layout. Balanced Cantilevers are typically for VMS sign applications and shall have the sign positioned so that no less than ⅓ of the sign dead load resides on either side of the post.

10.1.4.D VMS Installation

1. VMS units shall not be installed on unbalanced cantilever structures.
2. VMS installation on Sign Bridge structures designed in accordance with AASHTO 2015 shall be installed in accordance with the following:
   A. On spans 120 ft and greater up to two VMS units may be installed with a maximum weight of 4,000 lbs each. Maintenance walkways may be installed between VMS units, but may not exceed 160 lbs/ft, or exceed 50 percent of the structure span length.
   B. On spans less than 120 ft. up to three VMS units may be installed with a maximum weight of 4,000 lbs. each. Maintenance walkways may be installed between VMS units, but may not exceed 160 lbs/ft.
3. The number of VMS installed on Sign Bridge structures designed prior to AASHTO 2015 shall be reduced by one as defined in D.2-a and b.

10.1.4.E Monotube Sheet Guidelines

The following guidelines apply when using the Monotube Sign Structure Bridge Standard Drawing 10.1-A1-1, 10.1-A1-2, and 10.1-A1-3; 10.1-A2-1, 10.1-A2-2, and 10.1-A2-3; 10.1-A3-1, 10.1-A3-2, and 10.1-A3-3; 10.1-A4-1, 10.1-A4-2, and 10.1-A4-3; and 10.1-A5-1, 10.1-A5-2, and 10.1-A5-3.

1. Each sign structure shall be detailed to specify:
   A. Sign structure base Elevation, Station, and Number.
   B. Type of Foundation 1, 2, or 3 shall be used for the Monotube Sign Structures, unless a non-conventional design is required. The average Lateral Bearing Pressure for each foundation shall be noted on the Foundation sheet(s).
   C. If applicable, label the Elevation View "Looking Back on Stationing."
2. Designers shall verify the cross-referenced page numbers and details are correct.

10.1.4.F Monotube Quantities

Quantities for structural steel are given in Table 10.1.4-3.

Table 10.1.4-3 Sign Structure Material Quantities

ASTM A572 GR. 50 or ASTM 588	Cantilever			Sign Bridge							
	20' <	20' to 30'	Balanced	60' <	60' to 75'	75' to 90'	90' to 105'	105' to 120'	120' to 135'	135' to 150'	150' to 180'
Post (plf)	132	132	132	132	176	176	204	204	215	215	267
Base PL (lbs./ea)	537	806	806	672	735	735	888	888	978	978	1029
Beam, near Post (plf)	152	152	152	152	202	202	228	228	240	240	257
Span Beam (plf)	152	152	152	152	202	202	228	228	240	240	257
Corner Stiff. (lbs./ea set)	209	209	115	218	272	272	354	354	376	376	425
Splice Pl #1 (lbs/pair)	592	706	706	578	650	650	826	826	1116	1116	1295
Splice Pl #2 (lbs/pair)	--	--	--	--	730	730	1002	1002	1116	1116	1295
Splice Pl #3 (lbs/pair)	--	--	--	--	--	--	--	--	--	--	1295
Brackets (lbs./ea)	60	60	60	60	65	65	69	69	70	70	70
6" Hand Hole (lbs./ea)	18	18	18	18	18	18	18	18	18	18	18
6" x 11" Hand Hole (lbs./ea)	30	30	30	30	30	30	30	30	30	30	30
Anchor Bolt PL (lbs./ea)	175	175	175	175	185	185	311	311	326	326	326
Cover Plates (lbs./ea)	65	65	65	--	--	--	--	--	--	--	--

10.1.5 Foundations

10.1.5.A Monotube Sign Structure Foundation Types

The foundation type to be used shall be based on the geotechnical investigation performed and geotechnical report completed by the geotechnical engineer of record. Monotube sign structure foundations are Bridge Design Office conventional designs and shall be as described in the following paragraphs:

1. Foundation Type 1, is the preferred foundation type. A foundation Type 1 consists of a drilled shaft with its shaft cap. The design of the shaft depths shown in the Bridge Standard Drawings are based on an allowable lateral bearing pressure of 2,500 psf. The designer shall check these shaft depths using AASHTO LRFD methodology. For Type 1 foundation details and shaft depths see Bridge Standard Drawings 10.1-A4-1 and 10.1-A4-2. The Geotechnical Report for Foundation Type 1 should include the soil friction angle, soil unit weight, allowable lateral bearing pressure and temporary casing if required. Temporary casing shall be properly detailed in all Foundation Type 1 sheets if the Geotechnical Engineer requires them.
2. Foundation Type 2 is an alternate to Type 1 when drilled shafts are not suitable to the site. Foundation Type 2 is designed for an allowable lateral bearing pressure of 2,500 psf. See Bridge Standard Drawing 10.1-A4-3 for Foundation Type 2 Bridge Design Office conventional design information. The designer shall check these shaft depths using LRFD methodology.
3. Foundation Type 3 replaces the foundation Type 2 for poor soil conditions where the allowable lateral bearing pressure is between 2,500 psf and 1,500 psf. See Bridge Standard Drawing 10.1-A4-3 for Type 3 Foundation Bridge Design Office conventional design information. The designer shall check these shaft depths using LRFD methodology.
4. Barrier Shape Foundations are foundations that include a barrier shape cap on the top portion of Foundation Types 1, 2, and 3. Foundation details shall be modified to include Barrier Shape Cap details. Appendix 10.1-A5-1 details a single slope barrier.

10.1.5.B Luminaire, Signal Standard, and Camera Pole Foundation Types

Luminaire foundation options are shown on Standard Plan J-28.30. Signal Standard and Camera Pole foundation options are provided on Standard Plans J-26.10 and J-29.10 respectively.

10.1.5.C Foundation Design

Shaft type foundations constructed in soil for sign bridges, cantilever sign structures, luminaires, signal standards and strain poles shall be designed in accordance with the current edition of the AASHTO LRFD *Standard Specifications for Highway Signs, Luminaires, and Traffic Signals*; Section 13.6 Drilled Shafts.

For stratified soil conditions, a weighted average approach should be used to calculate a uniform set of soil properties (soil friction angle, soil unit weight, allowable lateral bearing pressure) for foundation design.

No provisions for foundation torsional capacity are provided in Section 13.6 of the AASHTO LRFD *Standard Specifications for Highway Signs, Luminaires, and Traffic Signals*.

The following approach can be used to calculate torsional capacity of sign structure, luminaire, and signal standard foundations:

Torsional Capacity, ϕT_n,

$$T_n = F^*\tan\phi D/2 \qquad 10.1.5(1)$$

Where:

F = Total force normal to shaft surface (kip)
D = Diameter of shaft (feet)
ϕ = Soil to foundation contact friction angle (degree), use smallest for variable soils

10.1.5.C.1 *Monotube Sign Structures Foundation Type 1 Design*

The standard embedment depth "Z", shown in the table on Monotube Sign Structure Standard Drawing 10.1-A4-1, shall be used as a minimum embedment depth and shall be increased if the shaft is placed on a sloped surface. The standard depth assumed that the top 4 feet of the C.I.P. cap is not included in the lateral resistance (i.e., shaft depth "D" in the code mentioned above), but is included in the overturning length of the sign structure. The sign structure shaft foundation GSPs under Section 8-21 in the RFP Appendix shall be included with all Foundation Type 1 shafts.

10.1.5.C.2 *Monotube Sign Structures Foundation Type 2 and 3*

These foundation designs are Bridge Design Office convention and shall not be adjusted or redesigned. They are used in conditions where a Foundation Type 1 (shaft) would be impractical due to difficult drilling or construction and when the State Geotechnical Engineer specifies their use. The concept is that the foundation excavation would maintain a vertical face in the shape of the Foundation Type 2 or 3. Contractors often request to over-excavate and backfill the hole, after formwork has been used to construct this foundation type. This is only allowed with the State Geotechnical Engineer's approval, if the forming material is completely removed, and if the backfill material is either CDF or concrete class 3000 or better.

10.1.5.C.3 *Monotube Sign Structures Non-Conventional Design Foundations*

The Geotechnical Engineer of record shall identify conditions where the foundation types (1, 2, or 3) will not work. In this case, the design forces are calculated, using the AASHTO LRFD *Standard Specifications for Structural Supports for Highway Signs, Luminaires, and Traffic Signals*, and applied at the bottom of the structure base plate. These forces are then considered service loads and the non-conventional design foundation is designed with the appropriate Service, Strength, and Extreme Load Combination Limit States and current design practices of the AASHTO LRFD and this manual. Some examples of these foundations are spread footings, columns and shafts that extend above ground adjacent to retaining walls, or connections to traffic barriers on bridges. The anchor rod array shall be used from Tables 10.1.4-1 and 10.1.4-2 and shall be long enough to develop the rods into the confined concrete core of the foundation. The rod length and the reinforcement for concrete confinement, shown in the top four feet of the Foundation Type 1, shall be used as a minimum.

10.1.5.C.4 *Signal Foundation Design*

The traffic signal standard GSPs under Section 8-20 shall apply for foundations in substandard soils.

10.1.5.D Foundation Quantities

1. Barrier quantities are approximate and can be used for all Foundation Types:

Class 4000 Concrete	7.15 CY (over shaft foundation)
Grade 60 Rebar	372 lbs

2. Miscellaneous steel quantities (anchor rods, anchor plate, and template) for all Monotube Sign Structure foundation types are listed below (per foundation). Quantities vary with span lengths as shown.

60 feet and under	= 1,002 pounds
61 feet to 90 feet	= 1,401 pounds
91 feet to 120 feet	= 1,503 pounds
121 feet to 180 feet	Barrier mounted sign bridge not recommended for these spans.

3. Monotube Sign Structure Foundation Type 1-3 quantities for concrete, rebar and excavation are given in Table 10.1.5-1. For Sign Bridges, the quantities shown below are for one foundation and there are two foundations per Sign Bridge. If the depth "Z" shown in the table on Bridge Standard Drawing 10.1-A4-1 is increased, these values should be recalculated.

Table 10.1.5-1 Sign Structure Foundation Material Quantities

	Cantilever Signs			Sign Bridges			
Concrete Cl. 4000 (cu. yard)	**20′ and Under**	**20′ – 30′**	**30' – 35'**	**60′ and Under**	**60′ – 90′**	**90′ – 120′**	**120′ – 180′**
Type 1	6.3	7.5	9.4	7.7	9.4	10.6	11.4
Type 2	8.0	10.5	12.2	10.0	12.2	14.1	15.0
Type 3	11.1	14.1	16.1	13.0	16.1	18.6	20.0
Rebar Gr. 60 Pounds							
Type 1	685	1,027	2,251	1,168	2,251	3,256	4,255
Type 2	772	1,233	1,724	1,190	1,724	2,385	2,838
Type 3	917	1,509	2,136	1,421	2,136	2,946	3,572
Excavation (cu. yard)							
Type 1	9.8	10.9	12.8	10.9	12.8	14.1	14.9
Type 2	20.7	25.7	29.0	24.6	29.0	32.9	34.6
Type 3	29.0	34.6	39.0	32.9	39.0	44.0	47.8

10.2 Structures Traffic Barrier

10.2.1 General Guidelines

The design criteria for traffic barriers on structures shall be in accordance with Section 13 of the LRFD-BDS. The following guidelines supplement the requirements in LRFD-BDS.

Traffic barrier is divided into two use categories -- structures barrier and non-structures barrier. The same barrier type can either be classified as a structures or non-structures barrier depending upon the use conditions. *Design Manual* Chapter 1610 addresses the design and use conditions of both structures and non-structures barrier while the *Bridge Design Manual* Sections 10.2, 10.3, and 10.4 provides additional design requirements of structures barrier that augments and supersedes design and use conditions in *Design Manual* Chapter 1610.

Structures barrier is defined as:

- Any barrier system that is located on, over, and/or adjacent to structures (e.g., bridges, buried structures/culverts, retaining walls, wingwalls, approach slabs, etc.). Barrier is considered to be "over" a structure when a structure is located below the barrier at any elevation. Barrier is considered to be "adjacent to" a structure when a structure is located in the general proximity of the barrier and all or part of the structure is located within the Design Clear Zone of the roadway.

Certain systems are defined as structures barrier regardless of their location. These barriers include:

- Moment slab traffic barrier,
- Barriers which retain greater than 10-inches of soil, or the amount permissible by the standard plan,
- Any barriers directly attached to foundations.

Non-structures barrier is defined as barrier which does not meet the qualifications for structures barrier described above. DM Chapter 1610 provides design and placement requirements for non-structures barrier.

Reveal height refers to the height from grade to the top of the crash resisting barrier system. The grade is typically roadway grade yet may be sidewalk grade. Adding an overlay to a bridge decreases the reveal height. The addition of a pedestrian element, such as WSDOT's Bridge Pedestrian Railing (BP-Rail), does not increase the barrier reveal height because the BP-Rail is not a part of the crash resisting system. However, the BP-Rail and other attachments to barriers are required to be crashworthy. For additional requirements for pedestrian and bicycle/pedestrian railings, see Section 10.5.1.

Some crash-tested systems identified in WSDOT standard plans may be used as structures barrier without being designed per Section 13 of the LRFD-BDS when the systems meet their applicable use criteria and the minimum requirements and the special conditions of this chapter.

These systems include:

- Guardrail systems and their transitions shown in WSDOT standard plans, except for connections to structures other than barrier transitions; and
- Rigid concrete barrier systems and their transitions shown in Standard Plans C60-10, C70-10, and C80-10.

See Section 10.3 for additional requirements for at-grade barrier.

There are three avenues for acceptance for use of roadside safety hardware on structures barrier and structures as follows:

- Use of a current WSDOT standard[1] within the limits of application as described or implied by that standard.
- Use of a successfully crash tested system to MASH 2016 along with a review by WSDOT which results in the system being accepted for use within Washington State.
- Modifications of WSDOT standards or successfully crash tested systems made with roadside safety considerations and reviewed by WSDOT which results in the modified system being accepted for use within Washington State.

Inclusion of details, configurations, or systems within a standard does not imply or give acceptance for the details, configurations, or systems to be used within Washington State outside of the limits and conditions as described or implied by those standards.

Any details, configurations, or systems approved on a project specific basis may not be used outside the scope or limits of that project without WSDOT review and approval.

The baseline structures barrier shall be a minimum Test Level 4 (TL-4) 42 inch reveal height single slope barrier. The Test Level shall be indicated in the Bridge General Notes or General Notes. Special conditions are delineated within this section as well as Section 10.3 specific to at grade barrier. When special conditions apply, as described herein, the barrier type, crashworthy shape, reveal height, and/or barrier test level shall be modified. Special conditions regarding an increase in test level or reveal height as well as prescriptive requirements on barrier type or crashworthy shape shall be adhered to. Special conditions regarding a decrease in test level or reveal height as well as prescriptive allowance on barrier type or crashworthy shape may be employed at the engineer's discretion. The 42 inch height is for worker fall protection in accordance with WAC 296-880.

A minimum TL-4, 42 inch minimum reveal height barrier is required on all bridges on Interstate, United States Numbered Highway System and State highway routes, regardless if the edge of the bridge is located within the Design Clear Zone. A minimum TL-4, 42 inch minimum reveal height barrier is recommended for buried structures and walls. Where a buried structure edge or wall would not otherwise require a barrier or railing system per *Design Manual* policy, such as being located outside of Design Clear Zone, and/or special conditions apply to reduce the TL-4 minimum, provide a minimum TL-2 system for structures barrier applications.

Special conditions for when a Test Level 5 (TL-5) barrier system are required govern over reductions to test level. TL-5 barrier shall employ a 45 inch minimum reveal height to accommodate a future overlay unless an overlay is provided at the time of construction. Special conditions which require an increase to minimum TL-5 barrier for new structures barrier are as follows:

- "T" intersections on a structure.
- Structures barrier with a radius of curvature less than 500 ft. TL-4 is adequate for the barrier on the inside of the curve.

[1] Regarding roadside safety elements accepted for use the following are considered WSDOT standards which may require design: WSDOT Standard Plans, WSDOT Bridge Standard Drawings, and barrier systems included within Section 10.2.3 Available WSDOT Designs.

- Structures barrier on roadways with greater than 2500 Average Daily Truck Traffic (ADTT) where approach speeds are 50 mph or greater. Freeway offramps are included when they meet this criteria.
- Accident history suggests a need.
- Protection of schools, business, or other important facilities below the structure.

The following special conditions apply to structures barrier which allow a different barrier type, crashworthy shape, reveal height, and/or reduce the minimum required test level.

- Type F barrier minimum TL-4, 42 inch reveal height, or Type F barrier minimum TL-5, 45 inch reveal height (when required), may be used for corridor continuity or when there is Type F barrier on the approach grade when approved by the State Bridge and Structures Architect.
- Oregon 3-tube minimum TL-4, 42 inch reveal height may be used for aesthetic considerations when approved by the State Bridge and Structures Architect.
- Barriers used in the median may be the type, test level, and reveal height which complies with the *Design Manual*. This does not apply to barriers on the exterior of a structure.
- Vertical faced Pedestrian Barrier may be used at locations where pedestrian and/or bicycle users are accommodated (see DM Chapter 1060 for Worker Fall Protection and DM Chapter 1520 for Roadway Bicycle Facilities). The Pedestrian Barrier shall have a minimum TL-4, 42 inch reveal height unless the following special condition(s) apply in which case a TL-3 barrier may be used;
  - Projects which have a minimum 5 foot width of raised sidewalk measured from the barrier face to front face of curb and posted speed limit of less than or equal to 35 mph.
  - A minimum TL-4 barrier protecting the Pedestrian Barrier from traffic.
  - The pedestrian barrier is located outside the Design Clear Zone.
- Barrier transitions are typically Test Level 3 even when used to connect a TL-5 system to a TL-3 system. Ensure a proper height transition with a 6H:1V or flatter slope is used to gradually taper from the structures barrier height to the non-structures barrier height.

The following special conditions apply to Buried Structures which allow a different barrier type, reveal height, and/or reduced minimum test level. In these instances, a barrier system as described below or a barrier system in accordance with *Design Manual* Chapter 1610 and Section 8.3.3.G may be used:

- Class 1 Buried Structures.
- Buried structures compatible with Standard Plan C-20.40 may use C-20.40.
- Buried structures with enough fill over the top of structure that allows guardrail posts to be installed within their use conditions without touching the top of structure and maintaining a 6 inch clearance from the bottom of the post to the structure may use a minimum Test Level 3 (TL-3) guardrail system.

When the barrier system copes over a wall, a moment slab traffic barrier or barrier connected to the approach slab is required.

The following special conditions apply to walls located within the Design Clear Zone which allow a different barrier type, crashworthy shape, reveal height, and/or reduce the minimum test level. Retained height of the wall for this use is defined by the vertical

distance between the grade on the high side of the roadway or sidewalk, and the lowest elevation within 4 foot lateral distance of the base of the wall. In the following special conditions, a barrier system in accordance with the *Design Manual* Chapter 1610 may be employed with use conditions therein and from Section 10.3.

- Where the barrier is on the lower grade/bottom of wall, or adjacent to a non-grade separation wall such as a noise barrier wall.
- On roadways with posted speeds of 25 mph or less.
- On roadways with Average Daily Truck Traffic (ADTT) of 500 or less.
- Where the retained height of the wall is 6 feet or less.
- Where the retained height of the wall is 12 feet or less and the length of wall with exposed height between 6 feet and 12 feet is less than 40 feet. (applies to walls with a maximum reveal height of 12 feet or shorter and ends of walls which are getting shorter).

Additional special conditions are possible. One example is competing life safety interests where a site distance for turning or stopping would be hindered by any particular barrier reveal height or where existing features, such as driveways, interfere with transitions or attenuation. Some structures barrier is located on roadways with a combination of lower speed and truck traffic volumes which may warrant a reduction in test level or allowance for a different barrier system. These instances require engineering judgment and may be applied where unique approval to deviate from BDM requirements is obtained. Approval to deviate from the BDM is granted by the State Bridge Design Engineer or the Bridge Barrier Specialist acting on their behalf.

All rigid barriers (such as a concrete barrier) shall meet the following requirements in relation to test level.

1. Adequate height to contain the crash test vehicle(s).
2. Has a crashworthy shape.
3. Barrier is determined to be structurally rigid by crash testing or structural analysis.

Adequate height is defined as a minimum of 42”, 36”, and 32” for TL-5, TL-4, and TL-3 respectively. The heights for TL-5 and TL-4 are from the November 2017 Project No 20-07/Task 395 TTI Project 607141 “Mash Equivalency of NCHRP Report 350-Approved Bridge Railings” Table 4.1, the height for TL-3 is informed by guidance and recommendations from Texas Transportation Institute (TTI) through Pooled Fund correspondence. Placement of hot mix asphalt (HMA) or other material reducing the reveal height below these values downgrades the barriers test level.

For the 32” barrier height, a vertical faced concrete barrier, similar to WSDOT Pedestrian Barrier, may be used as TL-3 with a minimum height of 29” when connecting to existing infrastructure or when site distance conflicts exist.

The WSDOT Bridge and Structures standard for existing bridges, bridge rehabilitation projects, and median barrier shall be a 34 inch or 42 inch Single Slope traffic barrier.

See Section 3.16.7 for protection of structures requirements. See LRFD-BDS Section 13 for additional Test Level selection criteria.

10.2.2 Bridge Railing Test Levels

It must be recognized that bridge traffic barrier performance needs differ greatly from site to site. Barrier designs and costs should match facility needs. This concept is embodied in the LRFD-BDS. Six different bridge railing test levels, TL-1 thru TL-6, and associated crash test/performance requirements are given in LRFD-BDS Section 13 along with guidance for determining the appropriate test level for a given bridge. Any reduction in Test Level requires approval by the State Bridge Design Engineer, or the Bridge Barrier Specialist acting upon their behalf.

10.2.3 Available WSDOT Designs

10.2.3.A Service Level 1 (SL-1) Weak Post Guardrail (TL-2)

This bridge traffic barrier is a crash tested weak post rail system. This system is limited to WSDOT internal use only. It was developed by Southwest Research Institute and reported in NCHRP Report 239 for low-volume rural roadways with little accident history. This design has been utilized on a number of short concrete spans and timber bridges. A failure mechanism is built into this rail system such that upon a 10 kip applied impact load, the post will break away from the mounting bracket. The thrie beam guardrail will contain the vehicle by virtue of its ribbon strength. This system was designed for a Working Stress design force of 10 kip applied at 22 inches above the deck surface. To ensure minimal or no damage to the bridge deck and stringers, the breakaway connection may be modified for a lower impact load (2 kip minimum) with approval of the State Bridge Design Engineer. The 2 kip minimum equivalent impact load is based on evaluation of the wood rail post strength tested in NCHRP Report 239. The appropriate guardrail approach transition shall be a Case 14 placement as shown on WSDOT Plan Sheet Library TB-56. For complete details see Appendix 10.4-A1-4.

10.2.3.B Texas T-411 Aesthetic Concrete Baluster (TL-2)

Texas developed this standard for a section of highway that was considered to be a historic landmark. The existing deficient concrete baluster rail was replaced with a much stronger concrete baluster that satisfactorily passed the crash test performance criteria set forth by the NCHRP Report 230. For details, visit TXDOT's Bridge and Structures website at www.txdot.gov/inside-txdot/division/bridge.html. The use of the Texas T-411 Aesthetic Concrete Baluster shall be approved by the State Bridge Design Engineer and the State Bridge and Structures Architect.

Figure 10.2.3-1

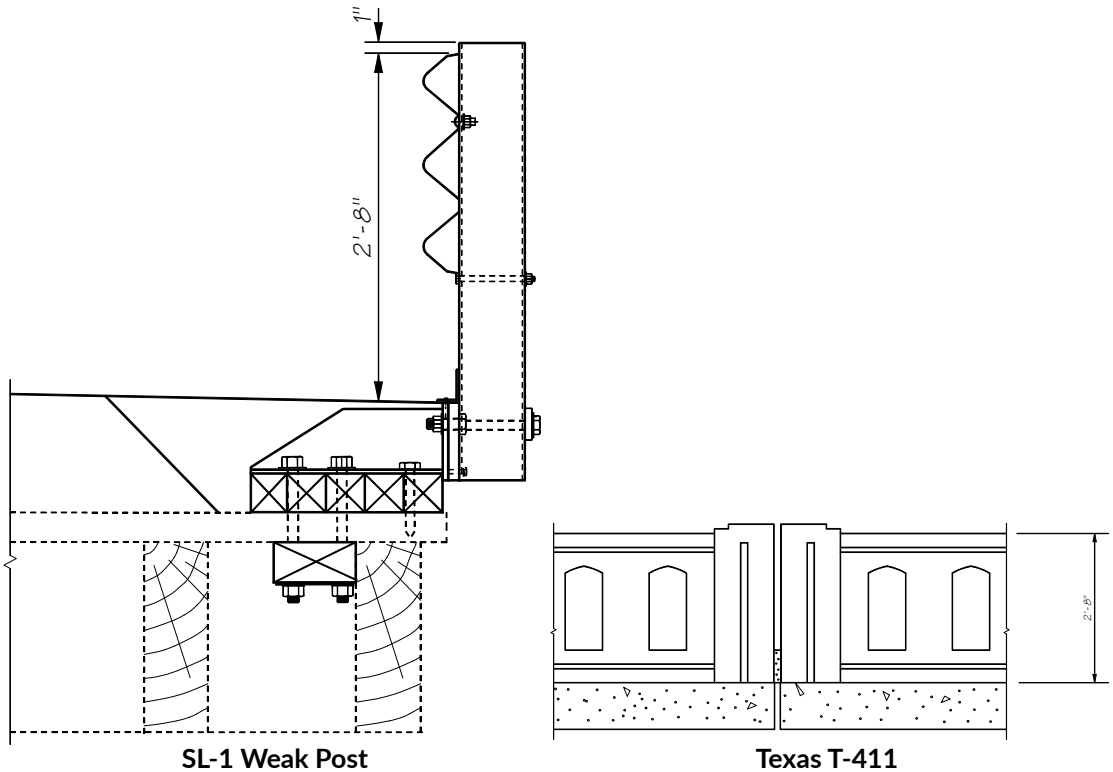

SL-1 Weak Post Texas T-411

10.2.3.C Traffic Barrier – 32″ F-Shape (TL-3)

This configuration was crash tested in the late 1960s, along with the New Jersey Shape, under NCHRP 230 and again at this test level under NCHRP 350. The steeper vertical shape tested better than the New Jersey face and had less of an inclination to roll vehicles over upon impact. For future deck overlays, an encroachment of 2.0 in., leaving a 1.0 in. lip has been satisfactorily tested for safety shapes, see LRFD-BDS Article C13.7.3.2. This barrier height will require the use of a Bridge Railing Type Pedestrian railing to meet fall protection requirements. For complete details see Bridge Standard Drawings 10.2-A1 and 10.2-A2.

10.2.3.D Traffic Barrier – 34″ Single Slope (TL-3)

This concrete traffic barrier system was designed by the state of California in the 1990s to speed up construction by using the "slip forming" method of construction. It was tested under NCHRP 350. WSDOT has increased the height from 32″ to 34″ to match the approach traffic barrier height and to allow the placement of one HMA overlay. Due to inherent problems with the "slip forming" method of traffic barrier construction WSDOT has increased the concrete cover on the traffic side from 1½″ to 2½″. This barrier height will require the use of a Bridge Railing Type Pedestrian railing to meet fall protection requirements. For complete details, see Bridge Standard Drawing 10.2-A3.

Figure 10.2.3-2

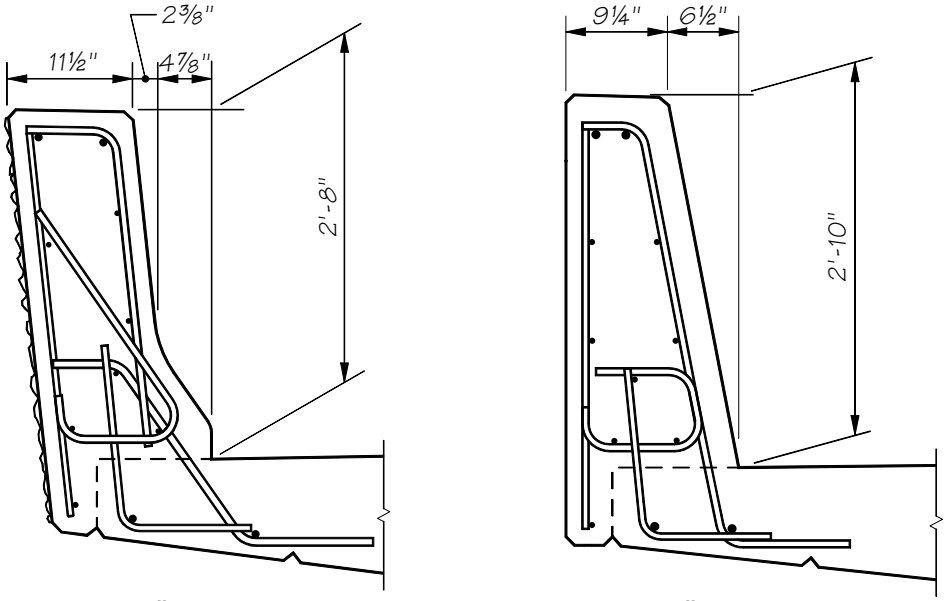

32″ F-Shape 34″ Single Slope

10.2.3.E Pedestrian Barrier (TL-3)

A vertical concrete face is considered a crashworthy shape. Since the traffic face geometry is better for pedestrians and bicyclists, WSDOT uses this system primarily in conjunction with a sidewalk. This barrier height will require the use of a Bridge Railing Type Pedestrian railing to meet fall protection requirements. For complete details, see Bridge Standard Drawing 10.2-A4.

The Pedestrian Barrier has been reduced from a TL-4 barrier to a TL-3 barrier due to its height of 32" being less than adequate to contain the design vehicle when compared to MASH criteria. The intent is to design this barrier as a TL-4 barrier, even though its classification does not meet TL-4 due to the height. On projects which have a minimum of 5' of raised sidewalk from the barrier face to traffic and traffic speeds less than or equal to 35 mph or a TL-4 barrier protecting the Pedestrian Barrier from traffic, it is permissible to use this barrier for new construction as a TL-3. For instances absent a TL-4 barrier or sidewalk and speed as described, a unique barrier design with a minimum overall concrete height of 36" is required to meet the TL-4 criteria. It is permissible and accepted for use within Washington State to use a custom designed Pedestrian barrier for TL-4 use with reveal height between 36" and 54".

10.2.3.F Oregon 3-Tube Curb Mounted Traffic Barrier (TL-4)

This is another crash tested traffic barrier that offers a lightweight, see-through option. This system was successfully crash tested under Mash 2016 for TL-4 conditions. When using this barrier, it is appropriate to use ODOT's transition details. A rigid thrie beam guardrail transition is required at the bridge ends, either directly connected to the three tube or through use of a concrete end block. For details, see the Oregon Bridge and Structure website at www.oregon.gov/ODOT/HWY/ENGSERVICES/Pages/bridge_drawings.aspx.

Figure 10.2.3-3

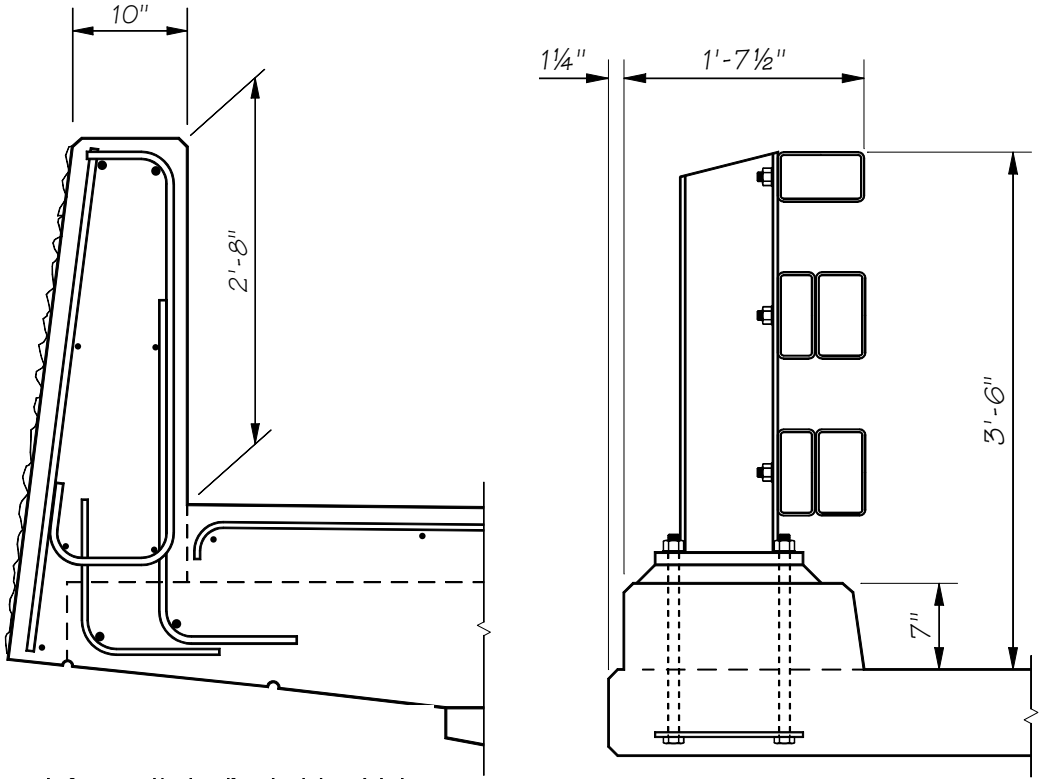

32" Vertical Oregon 3 Tube

10.2.3.G Traffic Barrier – 42″ and 45" F-Shape (TL-4 and TL-5)

This barrier is very similar to the 32″ F-shape concrete barrier in that the slope of the front surface is the same except for height. For complete details, see Bridge Standard Drawing and Standard Plan C81.10.

The intent is for TL-5 barrier systems to employ a 45" height to accommodate a future overlay while still meeting TL-5 requirements for minimum 42" height. At the time of publication, the standard drawings have not yet been updated. Reach out to BSO staff for 45" detailing if a TL-5 system is employed prior to the standard drawings being updated.

10.2.3.H Traffic Barrier – 42″ and 45” Single Slope (TL-4 and TL-5)

This option offers a simple to build alternative to the Shape F configuration. For complete details see Bridge Standard Drawing 10.2-A6 and Standard Plan C81.10. These systems are compliant with MASH Test Level 4 or 5 metrics.

The intent is for TL-5 barrier systems to employ a 45” height to accommodate a future overlay while still meeting TL-5 requirements for minimum 42” height. At the time of publication, the standard drawings have not yet been updated. Reach out to BSO staff for 45” detailing if a TL-5 system is employed prior to the standard drawings being updated.

Figure 10.2.3-4

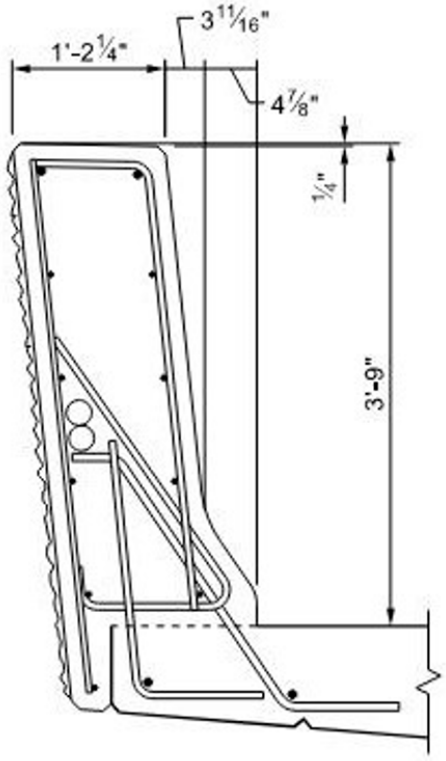

45″ F-Shape

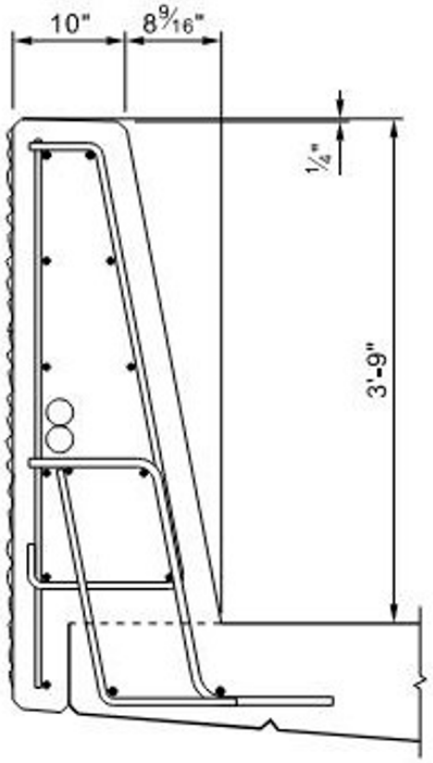

45″ Single Slope

10.2.4 Design Criteria

10.2.4.A Design Values

LRFD-BDS Appendix A13, as modified by the BDM, shall be used to design bridge traffic barriers and their supporting elements (i.e. the deck).

All concrete TL-4 barriers and their supporting structures shall employ design metrics from the following Table 10.2.4-1 which governs over LRFD-BDS table A13.2-1.

Table 10.2.4-1 TL-4 Concrete Barrier Design Parameters

Design Parameters	Barrier Reveal Height (in.)			
	36	39	42	>45
Impact Force, F_t (kips)	67.2	72.3	79.1	93.3
Friction Force, F_L (kips)	21.6	23.6	26.8	27.5
Vertical Force, F_v (kips)	37.8	32.7	22.0	N/A
Length of Force, L_t and L_L (ft)	4.0	5.0	5.0	14.0
Effective Load Height, H_e (in.)	25.1	28.7	30.2	45.5

N/A – Not Applicable

Values for intermediate heights between 36” and 42” may interpolate between the values in the table. The 42” height values may be used for reveal heights up to 45”.

Concrete traffic barriers shall be designed using yield line analysis as described in LRFD-BDS A13.3.1. The impact loads on traffic barriers shall be applied at the height specified for intended Test Levels in accordance with the LRFD-BDS Table A13.2-1 “*Design Forces for Traffic Railing*”, as modified in this section. WSDOT Standard F Shape, Single Slope, and Pedestrian barriers meet these requirements.

Deck overhangs supporting traffic barriers shall be designed in accordance with LRFD-BDS A13.4 as modified in this section. For concrete traffic barriers in Design Case 1, AASHTO requires M_s, the deck overhang flexural resistance, to be greater than M_c of the concrete traffic barrier base. This requirement is consistent with yield line analysis (see LRFD-BDS CA13.3.1) but results in over conservative deck overhang designs.

In order to prevent this unnecessary overdesign of the deck overhang for non-prestressed and non-segmental construction, the nominal traffic barrier resistance to transverse load R_W (LRFD-BDS A13.3.1) transferred from the traffic barrier to deck overhang shall not exceed 120 percent of the design force F_t (LFRD-BDS Table A13.2-1 and BDM Table 10.2.4-1) required for a traffic barrier. This limit of F_{ss}=min (R_w, 1.2*F_t) is applicable to the barrier to supporting structure connection for all uses. The deck overhang shall be designed in accordance with the requirements of LRFD-BDS A13.4.2 to provide a flexural resistance M_s, acting coincident with the tensile force T. At the inside face of the barrier M_s may be taken as:

for an interior barrier segment–$M_s = \frac{F_{ss} \cdot H_e}{L_C + 2 \cdot H}$

and for an end barrier segment–$M_s = \frac{F_{ss}^* \cdot H_e}{L_C + H}$

However, M_s need not be taken greater than M_c at the base. T shall be taken as:

for an interior barrier segment–$T = \frac{F_{ss}}{L_C + 2 \cdot H}$

and for an end barrier segment–$T = \frac{F_{ss}}{L_C + H}$

Barrier connection: $F_{ss} = \min(1.2*F_t, R_w)$
Deck Overhangs: $F_{ss} = \min(1.2*F_t, R_w)$
All other supporting structures $F_{ss}=R_w$

Deck overhangs for this use constitute plain reinforced concrete typically around 8" in thickness, non-prestressed moment slabs or approach slab, or plain reinforced and longitudinally prestressed box girders which employ a topping slab. Supporting Structure systems other than deck overhangs inclusive of post-tensioned decks, walls, and or Structure segments tied together without a topping slab, with the ties in the barrier resistance load path, shall design the load path of the barrier per LRFD-BDS without the reduction in design force. The reduction in design force may be used for the connection of the barrier to the supporting structure. Other revisions to the barrier design metrics from the BDM are still applicable for systems other than a deck overhang such as post-tensioned deck systems.

The end segment requirement may be waived if continuity between adjacent barriers is provided.

When an HMA overlay is required for initial construction, or other elements which affect the reveal height, increase the height for traffic barrier. See Section 10.2.4.C for details.

10.2.4.B Geometry

The traffic face geometry is part of the crash test and shall not be modified. A single slope face is the WSDOT standard, see Section 10.2.1. Contact the WSDOT Bridge and Structure Office Bridge Rail Specialist for further guidance.

Thickening of the traffic barrier is permissible for architectural reasons. Architectural modifications to continuous runs of barrier should not significantly increase the stiffness of the barrier. Thickening which does significantly increase the stiffness should be limited to localized areas associated with the architectural feature. All unique features, modifications, or barriers require design inclusive of load path to connected element. Concrete clear cover must meet minimum concrete cover requirements but can be increased to accommodate rustication grooves or patterns.

Thickening of the traffic barrier is permissible to accommodate roadside features such as sign bridges, luminaires, or similar elements. See Section 10.2.1 for process for acceptance for use within the state of Washington.

10.2.4.C Standard Detail Sheet Modifications

When designing and detailing a bridge traffic barrier on a superelevated bridge deck the following guidelines shall be used:

- For bridge decks with a superelevation of 8 percent or less, the traffic barriers (and the median barrier, if any) shall be oriented perpendicular to the bridge deck.
- For bridge decks with a superelevation of more than 8 percent, the traffic barrier on the low side of the bridge (and median barrier, if any) shall be oriented perpendicular to an 8 percent superelevated bridge deck. For this situation, the traffic barrier on the high side of the bridge shall be oriented perpendicular to the bridge deck.
- The adequate height to contain the test vehicle, provided in Section 10.2.1, are minimum reveal heights to qualify at the test level, modifications shall ensure the reveal height is adequate for the design test level.

Type F safety shape notes:

- The toe of the barrier, defined as the vertical portion of the traffic facing side of the barrier, shall be a maximum of 3" when exposed to traffic.
- Overlays shall not rise higher than the barrier toe, the toe of the barrier may be covered by a future overlay.
- Use of barrier toes >3" to account for an overlay present from day 1 open to traffic require unique design for the barrier and deck connection.

The standard detail sheets are generic and may need to be modified for each project. See Section 10.2.1 for the process for unique modifications. The permissible modifications are:

- Removal of the electrical conduit, junction box, and deflection fitting details. The number and size of conduit should not be increased, because it can reduce the concrete section, particularly at expansion joint fittings.
- Removal of design notes.
- Removal of non-applicable elements such as transitions not used or barrier on wall or other supporting structure not present in the project.
- Increase the 3″ toe dimension of the Shape F traffic barriers up to 6″ to accommodate HMA overlays present on day 1 open to traffic.

10.2.4.D Miscellaneous Design Information

- Show the back of pavement seat in the "Plan – Traffic Barrier" detail.
- At roadway expansion joints, show traffic barrier joints normal to centerline except as shown on sheets Appendix 9.1-A1-1 and 9.1-A2-1.
- When an overlay is required or intended, the adequate height to contain the test vehicle from BDM Section 10.2.1 shall be provided in the post overlay condition, or the barrier does not qualify for the given test level.
- When bridge lighting, sign bridges, or other appurtenances are a part of the contract, include the associated details and connection sheets.
- Approximate quantities for the traffic barrier sheets on an 8" thick deck including the tail and a representative ½" of concrete for the fractured fin finish are:

Barrier Type	Weight (lb/ft)	$\overline{x}$ (in)*
32″ F-shape (3″ toe)	481	4.12
34″ Single Slope	517	5.80
42″ F-shape (3″ toe)	734	4.91
42" Single Slope	703	6.61
45″ F-shape (3″ toe)	782	4.75
45″ Single Slope	764	6.80
32″ Pedestrian	640**	

Using concrete class 4000 with a unit weight of 155 lb/ft^3

* $\overline{x}$ is measured from the back face of barrier or for type f the back face of barrier at deck level.

** with 6″ sidewalk, will vary with sidewalk thickness, legacy numbers from prior calculation.

- Steel Reinforcement Bars:

  S_1 & S_2 or S_3 & S_4 and W_1 & W_2 bars (if used) shall be included in the Bar List. S_1, S_3, and W_1 bars shall be epoxy coated.

Table 10.2.4-2 Barrier Impact Design Forces on Traffic Barrier, Deck Overhang, and other Supporting Structures

Parameters		Type F 32 in. (TL-3)[1]		Single Slope 34 in. (TL-3)[1]		Type F 42 in.[3] (TL-4)		Single Slope 42 in.[3] (TL-4)		Type F 45 in. (TL-5)		Single Slope 45 in. (TL-5)	
		Interior	End[2]	Interior	End[2]	Interior	End[2]	Interior	End[2]	Interior	End[2]	Interior	End[2]
Standard Reference		10.2-A1-1 to 3		10.2-A3-1 to 3		10.2-A5-1A to 3		C-81.10		10.2-A5-1 to 3		10.2-A6-1B to 3	
Traffic Barrier Design	Average M_c (ft-kips/ft)	20.62	20.62	19.39	19.39	26.02	26.02	22.49	22.49	25.95	25.95	23.08	37.12
	M_c at Base (ft-kips/ft)	27.24	27.24	26.11	26.11	32.97	32.97	30.76	30.76	32.97	32.97	31.94	51.61
	M_w (ft-kips)	42.61	46.23	46.29	43.42	72.96	72.14	54.77	53.02	98.41	97.11	83.97	81.34
	L_c (ft)	8.62	4.76	9.62	5.22	11.71	6.49	11.13	6.31	15.39	9.48	15.19	8.92
	R_w (kips)	133.24	73.56	131.72	71.41	174.05	96.55	143.02	81.08	213.04	131.22	186.96	176.61
	F_t (kips)	54.00	54.00	54.00	54.00	79.10	79.10	79.10	79.10	124.00	124.00	124.00	124.00
	H_e (in)	[5]	[5]	[5]	[5]	30.20	30.20	30.20	30.20	[5]	[5]	[5]	[5]
	L_t and L_L (ft)	[5]	[5]	[5]	[5]	5.00	5.00	5.00	5.00	[5]	[5]	[5]	[5]
Deck Overhang Design	$1.2*F_t$ (kips)	64.80	64.80	64.80	64.80	94.92	94.92	94.92	94.92	148.80	148.80	148.80	148.80
	Design F_{ss} (kips)	64.80	64.80	64.80	64.80	94.92	94.92	94.92	81.08	148.80	131.22	148.80	148.80
	$F_{ss}*H_e/(L_c+aH)$ (ft-kips/ft)[4]	12.39	23.28	11.30	21.47	12.77	23.90	13.18	20.80	22.75	34.71	22.96	41.10
	Design M_s (ft-kips/ft)	12.39	23.28	11.30	21.47	12.77	23.90	13.18	20.80	22.75	32.97	22.96	41.10
	Design T (kips/ft)	4.65	8.73	4.24	8.05	5.07	9.50	5.24	8.27	6.50	9.92	6.56	11.74
Sup.Structure to Barrier Reinf.	A_s required (in^2/ft)	0.29	0.57	0.27	0.53	0.23	0.43	0.27	0.43	0.40	0.59	0.45	0.83
	A_s provided (in^2/ft)[6]	0.41	0.62	0.41	0.62	0.41	0.62	0.28	0.53	0.59	0.88	0.66	0.96
	S_1 Bars[6]	#5 @ 9 in	#5 @ 6 in	#5 @ 9 in	#5 @ 6 in	#5 @ 9 in	#5 @ 6 in	#5 @ 13.5 in	#5 @ 7 in	#6 @ 9 in	#6 @ 6 in	#6 @ 8 in	#6 @ 5.5 in
Other Structures	Design M_s (ft-kips/ft)	25.47	26.42	22.97	23.66	23.41	24.31	19.86	20.80	32.57	32.97	28.84	48.78
	Design T (kips/ft)	9.55	9.91	8.62	8.87	9.30	9.66	7.89	8.27	9.31	9.92	8.24	13.94

[1] These barriers are downgraded to TL-3 due to insufficient height to contain the test vehicle. Their design is based on TL-4 metrics from AASHTO chapter 13 and A13.

[2] Traffic barrier dimensions and reinforcement used for calculation reflect WSDOT standard drawings or standard plans. Modifications shall be calculated per AASHTO-LRFD Chapter 13, A13, and the WSDOT BDM.

[3] TL-4 barriers are designed to the updated forces from WSDOT BDM Chapter 10, which governs over AASHTO Chapter 13 for these barriers.

[4] a = 1 for an end segment and 2 for an interior segment

[5] AASHTO Table A13.2-1 with H_e taken as H_e (min)

[6] S1 bar spacing and As provided are presented for fully developed bars.

Loads are based on vehicle impact only. For deck overhang design, the designer must incorporate dead load as well as check other limit states per LRFD A13.4.1.

f_y = 60 ksi; f'c = 4 ksi

10.3 At Grade Concrete Barriers

10.3.1 General Guidelines

Section 10.2 is applicable except as modified herein. Section 10.2.1 delineates minimum requirements as well as special conditions which modify the minimum requirements.

The WSDOT Bridge and Structures standard for at grade traffic barriers for new construction includes: Differential Grade Concrete Barriers, Moment Slab Traffic Barriers, High Performance Single Slope barrier per standards C70-10 or C80-10, standard height Single Slope barrier per C70.10 or C80.10, and Concrete Barrier Type F per C60.10. Retrofit construction and repairs shall follow BDM Section 10.4.

The following requirements apply to all at grade concrete barriers used as structures barrier.

- For walls, other than noise walls, placed behind Differential Grade Concrete barriers, Moment Slab Traffic Barrier, and standard concrete barrier, provide a minimum distance of 5-feet of widening with a 20:1 or flatter slope from the back of barrier to the inner face of wall.
- When over a structure differential grade concrete barrier is only permitted in the median.
- Single-Slope Concrete Barrier (cast-in-place) Vertical Back (Standard Plan C-80.40) may be used adjacent to fill walls or within tunnels and placed closer than 5' to the adjacent wall face.
- For median use (separation of traffic on or over a monolithic structure) a TL-3 system may be employed when allowed by the *Design Manual* (i.e. such as cases where median barrier are not on freeways with 22' or less of median width.)

The following requirements apply when systems per C70.10 or C80.10 are used as structures barrier and/or when differential grade concrete barrier is used around other structures.

- Other than for median use, the high performance version shall be used regardless of special conditions within Section 10.2.1 which would permit a TL-3.
- Other than median use, these systems require roadway or base course material for a minimum of 2-feet vertical measured from lower roadway. See WSDOT *Design Manual* Chapter 1610 for additional placement and use criteria for standard concrete barrier.
- Systems per C70.10 and/or C80.10 shall not be embedded in concrete when used as structures barrier.

The Standard Plan C60.10 concrete anchor pin detail shall not be used at a structures barrier. The HMA anchoring pin detail is allowed when use conditions are met and there is a minimum of 6 inches clearance from the tip of the anchoring pin and any structure element.

10.3.2 Differential Grade Concrete Barriers

The top of the differential grade concrete barrier shall have a minimum width of 6″. If a luminaire or sign is to be mounted on top of the differential grade concrete barrier, then the width shall be increased to accommodate the mounting plate and 6″ of clear distance on each side of the luminaire or sign pole. The transition flare rate shall follow the *Design Manual*.

Differential grade concrete barriers are walls and barriers. All applicable limit states, design considerations, detailing, and constraints associated with walls and barriers shall apply. This includes, but is not limited to, provisions in LRFD-BDS, the WSDOT GDM, and the WSDOT *Design Manual* for both walls and barriers.

Differential grade concrete barriers placed adjacent to a slope require implications of the slope to be incorporated into the design. The bench requirements for walls from the WSDOT GDM are applicable.

See Section 10.2 for how elements are accepted for use within Washington State. Blunt edges, snags, and pinch points are not appropriate to expose to traffic.

10.3.2.A Differential Grade Concrete Barriers

Concrete barriers at grade are sometimes required in median areas with different roadway elevations on each side. The standard Single Slope barrier can be used for a grade difference up to 10″ for a 2′-10″ safety shape and up to 6″ for a 3′-6″ safety shape. See Standard Plans C-70.10 and C-80.10 for details.

If the difference in grade elevations is 4′-0″ or less, then the concrete barrier shall be designed as a rigid system in accordance with LRFD-BDS with the following requirements:

1. All applicable loads shall be applied in accordance to LRFD-BDS Section 3. The structural capacity of the differential grade concrete barrier and supporting elements shall be designed for the required Test Level (TL) vehicle impact design forces in accordance with LRFD-BDS Sections 5 and 13. Any section along the differential grade barrier and supporting elements shall not fail in shear, bending, or torsion when the barrier is subjected to the TL impact forces.
2. For soil loads without vehicle impact loads, the concrete barrier shall be designed as a retaining wall (barrier weight resists overturning and sliding). Passive soil resistance may be considered with concurrence by the geotechnical engineer.
3. Vehicle impact loads shall be applied on the side of the concrete barrier retaining soil if there is traffic on both sides. The vehicle impact loads shall be applied at the height specified for intended Test Levels in accordance to the LRFD-BDS Section 13, Table A13.2-1 "*Design Forces for Traffic Railing* (32-inch for TL-4, and 42-inch for TL-5)" as modified by Section 10.2.4.
4. For soil loads with vehicle impact loads, the LRFD-BDS Extreme Event loading for vehicular collision shall also be analyzed. Equivalent Static Load (ESL) per NCHRP Report 663 may be applied as the transverse vehicle impact load for evaluating sliding, bearing, and overturning only. For TL-3 barrier systems, the ESL shall be 10 kips, for TL-4 barrier systems, the ESL shall be 15 kips and for TL-5, the ESL shall be 23 kips. The point of rotation for overturning shall be taken at the toe of barrier. Sliding resistance factor shall be 0.8 and overturning resistance factor shall be 0.5 (supersedes LRFD-BDS 10.5.5.3.3).

5. The effective length of the concrete barrier required for stability shall be no more than 10 times the overall height, but not to exceed the length between barrier expansion joints (or one precast section). The barrier shall act as a rigid body behavior and shall be continuous throughout this length of barrier. Any coupling between adjacent barrier sections or friction that may exist between free edges of barrier and the surrounding soil shall be neglected.
6. A special impact analysis shall be performed at the barrier ends if the barrier terminates without being connected to a rigid object or dowelled to another barrier. Differential barrier deflection from barrier impact may cause a vehicle to "snag" on the undeflected barrier. The barrier depth may need to be increased at the end to prevent this deflection.
7. The differential grade traffic barrier shall have dummy joints at 8 to 12 foot centers based on project requirements.
8. Full depth expansion joints with shear dowels at the top will be required at intervals based on analysis but not to exceed a 120′-0″ maximum spacing.
9. Barrier bottom shall be embedded a minimum 6″ below roadway. Roadway subgrade and ballast shall be extended below whole width of differential grade barrier. When a single slope barrier is used, or other configurations absent a footing, the depth of embedment shall be equal or greater than the grade separation.

Traffic barriers supporting a soil height greater than 4'-0" shall be designed as reinforced concrete retaining walls with a traffic barrier at the top and a barrier shape at the cut face. For external stability, the full loadings for the Extreme Event Limit State from LRFD-BDS, Section 13 are applicable as modified by Section 10.2. When using these AASHTO loadings the associative phi factors from AASHTO are applicable. These provisions do not waive any requirements for walls or barriers from other codes, manuals, or sources.

10.3.3 Moment Slab Traffic Barrier

10.3.3.A General

The guidelines provided herein are based on NCHRP Report 663, FHWA/TX-12/9-1002-5, input from Texas Transportation Institute (TTI) on past WSDOT Standards, calculations, and engineering judgment. A resistance factor of 0.5 shall be used to determine rotational resistance. This guideline is applicable for TL-3, TL-4 and TL-5 barrier systems as defined in Section 13 of LRFD-BDS. Moment Slab Traffic Barriers shall employ a current concrete traffic barrier from Section 10.2.3.

Standard Plan C81.15 was developed for cast-in-place construction. Many of the details may also work for precast design. Other considerations such as weight revisions, shipping and picking considerations, super-elevation considerations, base friction variations, moment slab and/or barrier jointing details would need to be addressed by the Engineer of Record with stamped calculations and plans.

Figure 10.3.3-1 Global Stability of Barrier–Moment Slab System

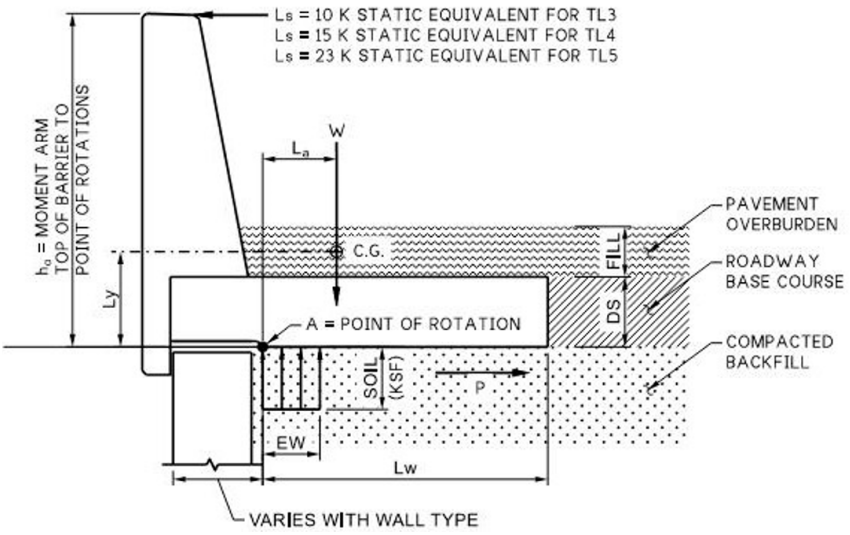

10.3.3.B Guidelines for Moment Slab Design

10.3.3.B.1 *Structural Capacity*

The structural capacity of the barrier and concrete moment slab shall be designed using impulse loads at appropriate Test Level applied to the top of the barrier, as shown in Figure 10.3.3-1 and in accordance with Sections 5 and 13 of LRFD-BDS. For strength design the impact force, Ft, is applied at H_e. Any section along the moment slab shall not fail in shear, bending, or torsion when the barrier is subjected to the design impact loads. The torsion capacity of the moment slab must be equal to or greater than the traffic barrier moment generated by the specified TL static equivalent of the vehicle impulse load.

The moment slab shall be designed as a deck supporting barrier in accordance to LRFD-BDS A13.4.2 as modified by Section 10.2.4.A. The moment slab reinforcement shall be designed to resist combined forces from the moment M_S (kip-ft/ft) and the tensile force T (kip/ft). M_S and T are determined from the lesser of the ultimate transverse resistance of barrier R_W (kip) and 120 percent of transverse vehicle impact force F_T (kip). M_S is not to be exceeded by the ultimate strength of barrier at its base M_C (kip-ft/ft).

10.3.3.B.2 *Global Stability*

Bearing stress, sliding, and overturning stability of the moment slab shall be based on an Equivalent Static Load (ESL) applied at the top of the barrier as shown in Figure 10.3.3-1. For TL-3 barrier systems, the ESL shall be 10 kips. For TL-4 barrier systems, the ESL shall be 15 kips. For TL-5 barrier systems, the ESL shall be 23 kips.

The Equivalent Static Load (ESL) is assumed to distribute over the length of continuous moment slab through rigid body behavior. Barrier shall also be continuous or have shear connections between barrier sections if precast throughout this length of moment slab. Any coupling between adjacent moment slabs or friction that may exist between free edges of the moment slab and the surrounding soil shall be neglected.

10.3.3.B.3 *Minimum and Maximum Dimensions*

The minimum height of the traffic barrier portion of the moment slab shall be 42 inches above the finished roadway surface. When TL-5 systems are employed 42” is the

minimum adequate height to contain the test vehicle, consider using 45" minimum reveal height for TL-5 systems to be forward compatible with future overlays.

Moment slabs shall have a minimum width of 4.0 feet measured from the point of rotation to the heel of the slab and a minimum average depth of 0.83 feet. Moment slabs meeting these minimum requirements are assumed to provide rigid body behavior up to a length of 60 feet limited to the length between moment slab joints.

Rigid body behavior may be increased from 60 feet to a maximum of 120 feet if the torsional rigidity constant of the moment slab is proportionately increased and the reinforcing steel is designed to resist combined shear, moment, and torsion from TL static equivalent of the vehicle impulse loads.

For example: Rigid Body Length = (J'/J60)x(60 ft.) < 120 feet

The torsional rigidity constant for moment slabs shall be based on a solid rectangle using the following formula:

$$J = a \cdot b^3 \left[\frac{16}{3} - 3.36\left(\frac{b}{a}\right)\left(1 - \frac{b^4}{12a^4}\right)\right]$$

Where:

2a = total width of moment slab

2b = average depth of moment slab

For example:

Minimum Moment Slab Width = 48 inches: a = 24 inches

Minimum Moment Slab Average Depth = 10 inches: b = 5 inches J = J60 = 13,900 in^4

10.3.3.B.4 *Sliding of the Barrier*

The factored static resistance to sliding (ϕP) of the barrier-moment slab system along its base shall satisfy the following condition:

$$\phi P \geq \gamma Ls \quad (1)$$

Where:

Ls = Equivalent Static Load (10 kips for TL-3, 15 kips for TL-4, and 23 kips for TL-5)

ϕ = resistance factor (0.8) Supersedes AASHTO 10.5.5.3.3—Other Extreme Limit States

γ = load factor (1.0) for TL-3 and TL-4 [crash tested extreme event] load factor (1.2) for TL-5 [untested extreme event]

P = static resistance (kips)

P shall be calculated as: (2)

$$P = W \tan \phi_r$$

Where:

W = weight of the monolithic section of barrier and moment slab between joints or assumed length of rigid body behavior whichever is less, plus any material laying on top of the moment slab

ϕr = friction angle of the soil on the moment slab interface (°)

If the soil-moment slab interface is rough (e.g., cast in place), ϕ_r is equal to the friction angle of the soil ϕ_s. If the soil-moment slab interface is smooth (e.g., precast), tan ϕ_r shall be reduced accordingly (0.8 tan ϕ_s).

10.3.3.B.5 *Overturning of the Barrier*

The factored static moment resistance (ϕM) of the barrier-moment slab system to overturning shall satisfy the following condition:

$$\phi M \geq \gamma L_s h_a \quad (3)$$

Where:

- A = point of rotation, where the toe of the moment slab makes contact with compacted backfill adjacent to the fascia wall, or end of slab neglecting barrier tail for on grade applications.
- L_w = width of moment slab
- L_s = Equivalent Static Load (10 kips for TL-3, 15 kips for TL-4, and 23 kips for TL-5)
- φ = resistance factor (0.5) Supersedes AASHTO 10.5.5.3.3—Other Extreme Limit States and NCHRP Report 663
- γ = load factor (1.0) for TL-3 and TL-4 [crash tested extreme event]
  load factor (1.2) for TL-5 [untested extreme event]
- h_a = moment arm taken as the vertical distance from the point of impact due to the dynamic force (top of the barrier) to the point of rotation A
- M = static moment resistance (kips-ft)
  M shall be calculated as:
  $$M = W (L_a) \quad (4)$$
- W = weight of the monolithic section of barrier and moment slab between joints or assumed length of rigid body behavior whichever is less, plus any material laying on top of the moment slab
- L_a = horizontal distance from the center of gravity of the weight W to point of rotation A

The moment contribution due to any coupling between adjacent moment slabs, shear strength of the overburden soil, or friction which may exist between the backside of the moment slab and the surrounding soil shall be neglected.

10.3.3.C Guidelines for the Soil Reinforcement

Design of the soil reinforcement shall be in accordance with the *Geotechnical Design Manual* Chapter 15.

10.3.3.D Design of the Wall Panel

The wall panels shall be designed to resist the dynamic pressure distributions as defined in the *Geotechnical Design Manual* Chapter 15.

The wall panel shall have sufficient structural capacity to resist the maximum design rupture load for the wall reinforcement designed in accordance with the *Geotechnical Design Manual* Chapter 15.

The static load is not included because it is not located at the panel connection.

10.3.4 Precast Concrete Barrier

10.3.4.A Concrete Barrier Type F and Type 2

"Concrete Barrier Type F" (see Standard Plans C-60.10 or C-60.15) may be used on bridges for median applications or for temporary traffic control based on the following guidelines:

1. The use of this barrier is limited to TL-3 conditions based upon the height not being sufficient to contain the test vehicle for TL-4 conditions.
2. For temporary applications, no anchorage is required if there is 3 feet or greater slide distance between the back of the traffic barrier and an object or traffic lane, and 3 feet or greater to the edge of the bridge deck or a severe drop off (see *Design Manual*).
3. For permanent applications in the median, no anchorage will be required if there is a 6 foot or greater slide distance between the traffic barrier and the traffic lane.
4. For temporary applications, dual-sided barrier shall not be placed closer than 9 inches to the edge of a bridge deck or substantial drop-off and shall be anchored (see Standard Plans K-80.35).
5. When used to retain soil the provision of Section 10.3.2.A shall apply.
6. When transitioning to different height barrier off the structure roadside safety considerations shall be employed.

"Concrete Barrier Type 2" (see Standard Plan K-80.32) may be used on bridges for temporary traffic control or for partial replacements when matching existing barrier based on the following guidelines:

1. No anchorage is required if there is 3 feet or greater slide distance between the back of the traffic barrier and an object or traffic lane, and 3 feet or greater to the edge of the bridge deck or a severe drop off (see *Design Manual*).
2. For temporary applications, the dual-sided barrier shall not be placed closer than 9 inches to the edge of a bridge deck or substantial drop-off and shall be anchored (see Standard Plan K-80.35).
3. When used to retain soil the provisions of Section 10.3.2.A shall apply.

10.3.4.B Concrete Barrier Type F Narrow Base and Concrete Barrier Type 4

"Concrete Barrier Type F Narrow Base" (see Standard Plan C-60.10), is not a free standing traffic barrier in permanent applications. This barrier shall be placed against a rigid vertical surface that is at least as tall as the traffic barrier. For temporary use this barrier may be freestanding when anchored to the bridge deck (see Standard Plan K-80.37). The barrier shall not be placed closer than 6-inches to the edge of the bridge deck or a severe drop-off. The "Concrete Barrier Type F Narrow Base" is not designed for soil retention.

"Concrete Barrier Type 4" (see Standard Plan K-80.37), is only suitable in temporary conditions. Type 4 barrier is not freestanding and shall be placed against a rigid vertical surface that is at least as tall as the traffic barrier. However, Type 4 barrier may be freestanding only when anchored to a bridge deck. The barrier shall not be placed closer than 6-inches to the edge of the bridge deck or a severe drop-off. The "Concrete Barrier Type 4" is not designed for soil retention.

10.3.5 Miscellaneous Items

For design of walls (except for MSE walls) which are not integral with the barrier and are placed behind Differential Grade Concrete barriers, Moment Slab Traffic Barrier, and standard concrete barrier, the minimum horizontal vehicular collision load (CT) for extreme event limit state shall be the Equivalent Static Load, ESL (10 kips for TL-3, 15 kips for TL-4, and 23 kips for TL-5).

10.4 Bridge Traffic Barrier Rehabilitation

Bridge Traffic Barrier rehabilitations shall be designed in accordance with BDM Section 10.2, except as otherwise modified herein.

10.4.1 Policy

The bridge traffic barrier retrofit policy is: "to systematically improve or replace existing deficient rails within the limits of roadway resurfacing projects." This is accomplished by:

- Utilizing an approved crash tested rail system that is appropriate for the site or
- Designing a traffic barrier system to the strength requirements set forth by:
  - Section 2 of AASHTO *Standard Specifications for Highway Bridges, 17th edition for structures built prior to the year 2000*.
  - Section 13 and 13A of AASHTO LRFD BDS 10th edition for structures built in 2000 or later and prior to 2023.
- This section is applicable to modifications of structures and structural components in the barrier load path associated with barrier retrofit, rehabilitation, modification, repair, and/or replacements other than complete replacements for structures within the applicable timeframe, those constructed prior to the year 2023.

10.4.2 Guidelines

A strength and geometric review is required for all bridge rail rehabilitation projects. If the strength of the existing bridge rail is unable to resist a 10 kip barrier impact design load or has not been crash tested, then modifications or replacement will be required to improve its redirectional characteristics and strength. Bridges that have deficient bridge traffic barriers were designed to older codes.

For existing bridge traffic barriers on structures constructed in 2000 or later and before 2023, the design criteria in AASHTO LRFD BDS, 10th Edition, Chapters 13 and 13A, including the CT loadings for TL-4 and other barrier systems, may be used for barrier retrofit design. The current BDM or current edition of AASHTO LRFD BDS may also be used. However, designers should recognize that the 2023 BDM revised the design criteria for TL-4 concrete barriers, and future editions of AASHTO LRFD BDS may include additional revisions. These revised criteria may not be achievable by older bridge structures without additional structural modifications.

The AASHTO LFD load of 10 kips shall be used in the retrofit of existing bridge traffic barrier systems constructed prior to the year 2000. No load less than 10 kips shall be applied, and the strength of the system shall be assessed in the pre and post retrofit condition. Any reduction in structural capacity of greater than or equal to 10% requires approval by the Design Unit Manager, or for designs done outside of the bridge office, approval by the State Bridge Design Engineer.

The use of the LRFD-BDS criteria to design bridge traffic barrier rehabs will result in a bridge deck that has insufficient reinforcement to resist moment from a traffic barrier impact load and will increase the retrofit cost due to expensive deck modifications.

If the design of the bridge rehabilitation includes other bridge components that will be designed using LRFD-BDS then the following minimum equivalent Extreme Event (CT) traffic barrier loading can be used limited to a maximum of <10% reduction:

Flexure = (1.3)*(1.67)*(10 kip) / (0.9) = 24.10 kip
Shear = (1.3)*(1.67)*(10 kip) / (0.85) = 25.54 kip

10.4.3 Design Criteria

Standard thrie beam guardrail post spacing is 6′-3″ except for the SL-1 Weak Post, which is at 8′-4″. Post spacing can be increased up to 10′-0″ if the thrie beam guardrail is nested (doubled up).

Gaps in the guardrail are not allowed because they produce snagging hazards. The exceptions to this are:

- Movable bridges at the expansion joints of the movable sections.
- At traffic gates and drop down net barriers.
- At stairways.

Design F guardrail end sections will be used at the approach and trailing end of these gaps.

For Bridge Traffic Barrier Rehabilitation the following information will be needed from the Region Design office:

- Bridge Site Data Rehabilitation Sheet – DOT Form 235-002A.
- Photos, preferably digital JPEG format.
- Layout with existing dimensions.
- Standard Plan thrie beam guardrail transitions (selected by Region Design office) to be used at each corner of the bridge (contact bridges and structures office for thrie beam height).
- Location of any existing utilities.
- Measurements of existing ACP to top of curb at the four corners, midpoints and the locations of minimum and maximum difference (five locations each side as a minimum).
- Diagram of the location of Type 3 anchors, if present, including a plan view with vertical and horizontal dimensions of the location of the Type 3 anchor connection relative to the intersecting point of the back of pavement seat with the curb line.
- The proposed overlay type, quantities of removal and placement.
- For timber bridges, the field measurement of the distance from the edge of bridge deck to the first and second stringer is required for mounting plate design.

Placement of the retrofit system will be determined from the *Design Manual*. Exceptions to this are bridges with sidewalk strength problems, pedestrian access issues, or vehicle snagging problems.

10.4.4 WSDOT Bridge Inventory of Bridge Rails

Concrete balusters are deficient for current lateral load capacity requirements. They have approximately 3 kips of capacity whereas 10 kips is required.

The curb and rail base system/Type 7 bridge rail shall maintain a minimum 6 inch curb height. If this requirement is not met then the existing HMA will need to be removed to re-establish the 6 inch minimum curb height during the next paving cycle.

Figure 10.4.4-1

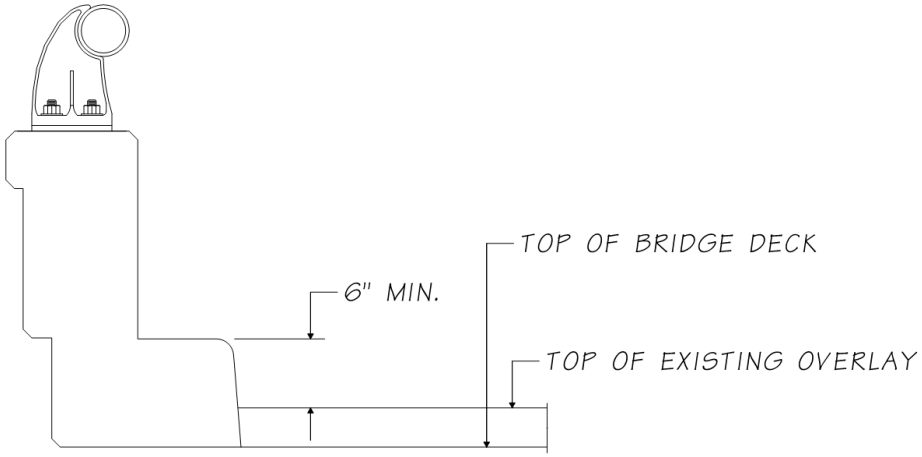

The combination high-base concrete parapet and metal rail may or may not be considered adequate depending upon the rail type. The metal rail Type R, S, and SB attached to the top of the high-base parapet are considered capable of resisting the required 5 kips of lateral load. Types 3, 1B, and 3A are considered inadequate. See the *Design Manual* for replacement criteria.

10.4.5 Available Retrofit Designs

10.4.5.A Washington Thrie Beam Retrofit of Concrete Balusters

This system consists of thrie beam guardrail stiffening of existing concrete baluster rails with timber blockouts. The Southwest Research Institute conducted full-scale crash tests of this retrofit in 1987. Results of the tests were satisfactory and complied with criteria for a Test Level 2 (TL-2) category in the Guide Specifications. For complete details see Bridge Standard Drawing 10.4-A1-1.

10.4.5.B Delaware Thrie Beam Guardrail

This crash tested rail system can be utilized at the top of a raised concrete sidewalk to separate pedestrian traffic from the vehicular traffic or can be mounted directly to the top of the concrete deck. For complete details see Thrie Beam Retrofit Concrete Curb in Appendix 10.4-A1-3.

10.4.5.C Concrete Parapet Retrofit

This is similar to the Delaware system. For complete details see Appendix 10.4-A1-2.

10.4.5.D SL-1 Weak Post

This bridge traffic barrier is a crash tested weak post rail system. It was developed by Southwest Research Institute and reported in NCHRP Report 239 for low-volume rural roadways with little accident history. This design has been utilized on a number of short concrete spans and timber bridges. A failure mechanism is built into this rail system such that upon a 10 kip applied impact load, the post will break away from the mounting bracket. The thrie beam guardrail will contain the vehicle by virtue of its ribbon strength. This system was designed for a Working Stress design force of 10 kip applied at 22 inches above the deck surface. To ensure minimal or no damage to the bridge deck and stringers, the breakaway connection may be modified for a lower impact load (2 kip minimum) with approval of the WSDOT State Bridge Design Engineer. The 2 kip minimum equivalent impact load is based on evaluation of the wood rail post strength tested in NCHRP Report 239. The appropriate guardrail approach transition shall be a Case 14 placement as shown on WSDOT Standard Plan C-2h. For complete details see Appendix 10.4-A1-4.

10.4.6 Available Replacement Designs

10.4.6.A Traffic Barrier – Shape F Retrofit

This is WSDOT's preferred replacement of deficient traffic barriers and parapets on high volume highways with a large truck percentage. All interstate highway bridges shall use this type of barrier unless special conditions apply. For complete details see Bridge Standard Drawing 10.4-A2.

10.5 Bridge Railing

10.5.1 Design

WSDOT pedestrian and bicycle/pedestrian railings are designed in accordance with Chapter 13 in LRFD-BDS. LRFD-BDS calls for a minimum of 42″ for bicycle railings whereas WSDOT requires a minimum height of 54″ on structures. The railings in Section 10.5.2 are not designed for vehicular impact loads assuming location is low speed, location is outside of Design Clear Zone as defined in the *Design Manual* Chapter 1600, or location has minimal safety consequence from collapse of railing. Railings for other locations shall be designed for vehicular impact loads in accordance with Chapter 13 and/or 15 in the LRFD-BDS. Emergency and maintenance access shall be considered.

Pedestrian and bicycle railings shall be designed using a Live Load factor of 1.75.

Fall Protection railing shall meet the requirements of WAC 296-880 and as described in the *Design Manual* Chapter 1060.

Fall protection pipe railings shall be designed using a Live Load factor of 1.75.

Cable fence shall be designed to Allowable Stress Design

Baluster spacing shall be in accordance with LRFD-BDS Chapter 13.8. The use of a more restrictive baluster spacing, such as IBC 1013.4, may be acceptable on a case-by-case basis. Request to use a more restrictive baluster spacing shall come from the WSDOT Project Engineer and shall be approved by the WSDOT State Bridge Design Engineer.

10.5.2 Railing Types

10.5.2.A Bridge Pedestrian Railing Type BP-10

This pedestrian railing is designed to sit on top of the 32″ and 34″ traffic barriers and to meet pedestrian and fall protection height requirements of 42″. For complete details see Bridge Standard Drawings 10.5-A1-1 and 2.

10.5.2.B Bridge Pedestrian Railing Type BP-22

These railings are designed to meet WSDOT's minimum bicycle height requirements of 54″, and sit on top of the 32″ and 34″ traffic barriers.

There are two versions—the BP and S-BP. The BP is the standard railing and is made out of aluminum. The S-BP is the steel version designed for use in rural areas because of aluminum theft. For complete details see Bridge Standard Drawings 10.5-A2-1 and 2 for Aluminum and 10.5-A3-1 and 2 for Steel.

10.5.2.C Bridge Pedestrian Railing Type BP-12

These railings are designed to meet WSDOT's minimum bicycle height requirements of 54″, and sit on top of the 42″ traffic barriers. For complete details see Bridge Standard Drawings 10.5-A6-1 and 2 for Aluminum and 10.5-A7-1 and 2 for Steel.

10.5.2.D Bridge Pedestrian Railing Type BP-54

This railing is designed to sit on top of a six-inch curb on the exterior of a bridge sidewalk. It meets the bicycle height requirements of 54″. For complete details see Standard Drawings 10.5-A4-1 and 2.

10.5.2.E Bridge Railing Type Snow Fence

This railing is designed to prevent large chunks of plowed snow from falling off the bridge on to traffic below. For complete details see Standard Drawings 10.5-A5-2 and 10.5-A5-3.

10.5.2.F Bridge Railing Type Chain Link Fence

This railing is designed to minimize the amount of objects falling off the bridge on to traffic below. The design loading shall include pedestrian loads and wind loads as specified in LRFD-BDS. Consult with the HQ Design Office Railroad Liaison regarding review and acceptance of this detail near railroads. For complete details see Standard Drawing 10.5-A5-4.

10.6 Bridge Approach Slabs

Bridge approaches typically experience two types of settlement, global and local. Global settlement is consolidation of the deeper natural foundation soils. Local settlement is mainly compression of fill materials directly beneath the approach pavement due to construction. The combination of global and local settlements adjacent to the bridge end piers form the characteristic "bump" in the pavement at the bridge. The approach slab significantly reduces local settlement and will provide a transition to the long term roadway differential settlements. Generally, abutments with a deep foundation will have greater differential roadway settlements than spread footing foundations.

When Are Bridge Approach Slabs Required

Bridge approach slabs are required for the following structures:

- New bridges
- Widened bridges (full roadway width)
- Class 1 and Class 2 Buried Structures without a full depth Roadway section (including HMA and CSBC) within 25 feet of each end of the Buried Structure

Bridge approach slabs are not required for arched structures, such as a Three-Sided Structure having a chorded or arched top slab, Structural Plate Pipe, Structural Plate Arches, or composite concrete-filled arches and equivalent structures as determined by the State Bridge Design Engineer. Bridge approach slabs may be omitted for Buried Structures with Structural Clear Spans up to 30 ft and for bridges with 2 ft or more of fill over the superstructure when concurrence is reached between the Geotechnical Office, the Region Design Project Engineer Office, and the Bridge and Structures Office. Allowances for deleting bridge approach slabs are described in GDM Section 8.6.5.3.

Bridge approach slab lengths may be reduced for Buried Structures with Structural Clear Spans up to 25 ft with approval from the State Geotechnical Engineer. The reduced bridge approach slab length shall not be less than the greater of the structural span length of the Buried Structure and 10 ft.

Precast bridge approach slabs shall be considered when accelerated construction is required. Modifications may be required to the basecourse to provide a smooth surface for the precast unit(s).

Standard Plan A-40.50 – The Standard Plan A-40.50 is available to use or reference in a contract. Bridge and Structures Office designs will provide geometric information in a customized approach slab Plan View and show the approach slab length on the Bridge Layout Sheet.

Bridge Runoff – Bridge runoff at the abutments shall be carried off and collected at least 10 feet beyond the bridge approach slab. Drainage structures such as grate inlets and catch basins shall be located in accordance with Standard Plan B-95.40 and the recommendations of the Hydraulics Branch.

Approach Pay Item –All costs in connection with constructing bridge approach slabs are included in the unit contract price per square yard for "Bridge Approach Slab" when the item is included in the contract. Do not include the item for buried structures as the approach slab cost is included in the lump sum buried structure item. The pay item includes steel reinforcing bars, approach slab anchors, concrete, and compression seals.

10.6.1 Notes to Region for Preliminary Plan

All bridge preliminary plans shall show approach slabs at the ends of the bridges. In the Notes to Region in the first submittal of the Preliminary Plan to the Region, the designer shall ask the following questions:

1. Bridge approach slabs are shown for this bridge, and will be included in the Bridge PS&E. Do you concur?
2. The approach ends of the bridge approach slabs are shown normal to the survey line (a) with or (b) without steps (the designer shall propose one alternative). Do you concur?
3. Please indicate the pavement type for the approach roadway.

Depending on the type and number of other roadway features present at the bridge site (such as approach curbs and barriers, drainage structures, sidewalks, utilities and conduit pipes) or special construction requirements such as staged construction, other questions in the Notes to Region pertaining to the bridge approach slabs may be appropriate.

Special staging conditions exist when the abutment skew is greater than 30° and for wide roadway widths. This includes bridge widenings with (or without) existing bridge approach slabs. The preliminary plan should include details showing how these conditions are being addressed for the bridge approach slabs, and the designer shall include appropriate questions in the Notes to Region asking for concurrence with the proposed design.

10.6.2 Bridge Approach Slab Design Criteria

The standard bridge approach slab design is based on the following criteria:

1. The bridge approach slab is designed as a slab in accordance with LRFD-BDS. (Strength Limit State, IM = 1.33, no skew).
2. The support at the roadway end is assumed to be a uniform soil reaction with a bearing length that is approximately ⅓ the length of the approach slab, or 25′/3 = 8′.
3. The Effective Span Length (S_{eff}), regardless of approach length, is assumed to be: 25′ approach – 8′ = 17′.
4. Longitudinal reinforcing bars do not require modification for skewed approaches up to 30 degrees or for slab lengths greater than 25′.
5. The approach slab is designed with a 2″ concrete cover to the bottom reinforcing.

10.6.3 Bridge Approach Slab Detailing

The bridge approach slab and length along center line of project shall be shown in the Plan View of the Bridge Layout sheet. The Bridge Plans will also include approach slab geometric information as shown in the Plan view of Bridge Standard Drawing 10.6-A1-1. A minimum pavement seat width of 10 inches is required to support the bridge end of the bridge approach slab. The Approach Slab Plan sheets should be modified as appropriate to match the bridge site conditions. Approach slab Plan Views shall be customized for the specific project and all irrelevant details shall be removed.

Plan View dimensions shall define the plan area of the approach slab. The minimum dimension from the bridge is 25′. If there are skewed ends, then dimensions shall be provided for each side of the slab, or a skew angle and one side, in addition to the width. For slabs on a curve, the length along the project line and the width shall be shown.

Longitudinal contraction joints are required on bridge approach slabs wider than 40 ft. or where steps are used on skewed alignments. Joints shall be located at lane lines or median barrier and in accordance with Bridge Standard Drawing 10.6-A1-2. If joints are to be sawcut, cutting shall occur as soon as possible after finishing the concrete, but after the concrete has set enough not to be torn or damaged by the blade. Additionally, cutting shall occur before shrinkage cracks start to appear, but no later than 48 hours after concrete placement. Early-entry sawing equipment is typically used within 4 hours after finishing the slab, and conventional sawing equipment is typically used between 4 and 12 hours, but may vary depending on the concrete mix design and environmental conditions.

Additional layout and details may be required to address special roadway features and construction requirements such as: roadway curbs and barriers, sidewalks, utilities and conduits and staging. This means, if sidewalks and interior barriers (such as traffic-pedestrian barriers) are present, special details will be required in the Bridge Plans to show how the sidewalks and interior barriers are connected to and constructed upon the bridge approach slab. If the bridge construction is staged, then the approach slabs will also require staged construction.

10.6.4 Skewed Bridge Approach Slabs

For all skewed abutments, the roadway end of the bridge approach slab shall be normal to the roadway centerline. The WSDOT State Bridge Design Engineer shall be consulted when approach slab skew is greater than 30 degrees. Skews greater than 20 degrees require analysis to verify the bottom mat reinforcement, and may require expansion joint modifications.

The roadway end of the approach may be stepped to reduce the size or to accommodate staging construction widths. The approach slab shall only be stepped if the approach slab area can be reduced by 50 SY or more. At no point shall the roadway end of the approach slab be closer than 25′ to the bridge. These criteria apply to both new and existing bridge approach slabs. If stepped, the design shall provide the absolute minimum number of steps and the longitudinal construction joint shall be located on a lane line. See Figure 10.6.4-1 for clarification.

Figure 10.6.4-1 Skewed Approach

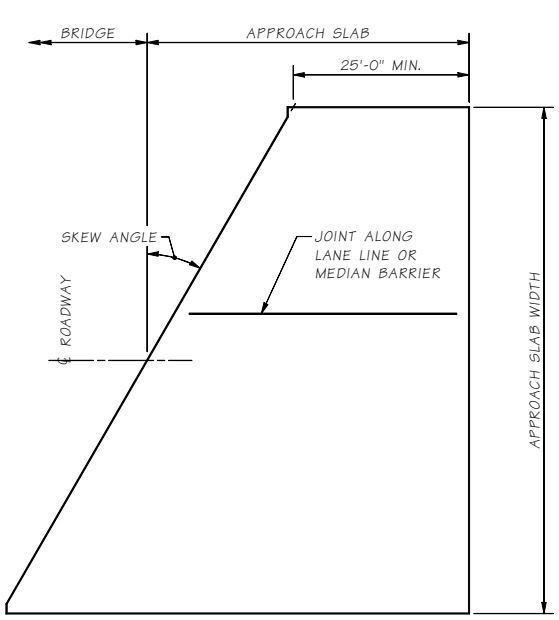

Skewed Approach ~ Typical

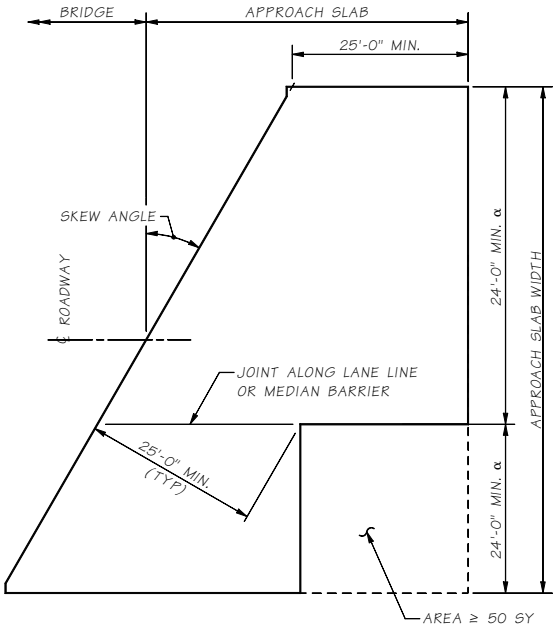

Skewed Approach ~ Stepped

α - DIMENSION MAY BE TWO LANE WIDTHS OR ONE LANE WIDTH PLUS THE SHOULDER WIDTH IF THE SHOULDER ≥ 8'-0".

In addition, for bridges with traffic barriers and skews greater than 20 degrees, the AP8 bars shall be rotated in the acute corners of the bridge approach slabs. Typical placement is shown in the flared corner steel detail, Figure 10.6.4-2.

Figure 10.6.4-2 Flared Corner Steel

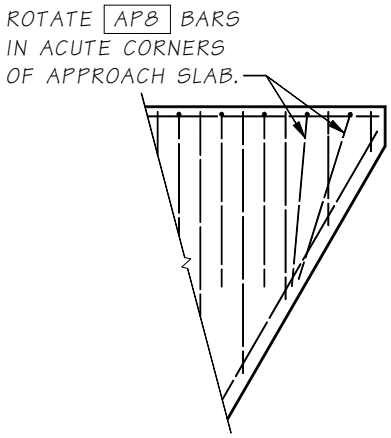

10.6.5 Approach Anchors and Expansion Joints

For semi-integral abutments or stub abutments, the joint design shall be checked to ensure the available movement of the standard joint is not exceeded. In general, the approach slab is assumed to be stationary and the joint gap is designed to vary with the bridge movement. Approach Slab Sheets 10-A1-3 and Standard Plan A-40.50 detail a typical 2½″ compression seal. For approach slabs with barrier, the compression seal shall extend into the barrier.

Approach slab anchors installed at bridge abutments shall be as shown in the Bridge Plans. For bridges with semi-integral type abutments, this can be accomplished by showing the approach slab anchors in the End Diaphragm or Pavement Seat details.

L Type Abutments – L type abutments do not require expansion joints or approach anchors because the abutment and bridge approach slab are both considered stationary. A pinned connection is preferred. The L type abutment anchor detail, as shown sign in Figure 10.6.5-1, shall be added to the abutment plan sheets. The pinned anchor for bridges with L type abutments shall be a #5 bar at one foot spacing, bent as shown, with 1′-0″ embedment into both the pier and the bridge approach slab. This bar shall be included in the bar list for the bridge substructure.

Figure 10.6.5-1 L Type Abutment Anchor Detail

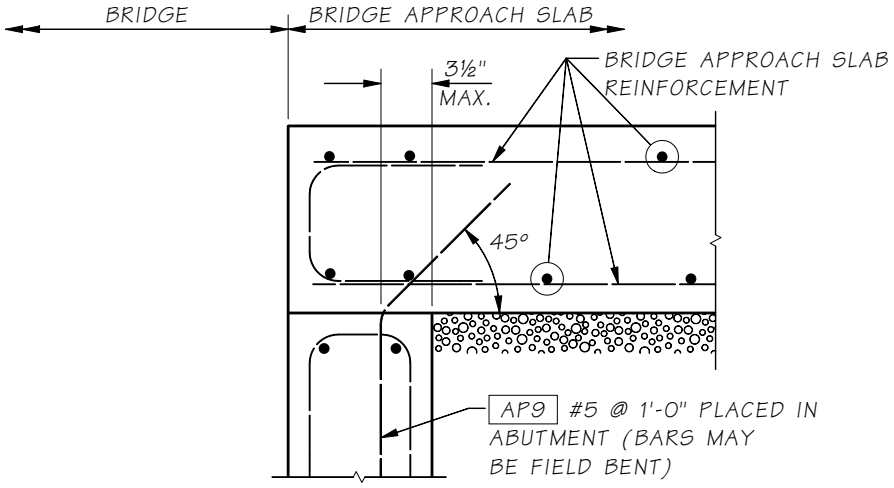

10.6.6 Bridge Approach Slab Addition or Retrofit to Existing Bridges

When bridge approach slabs are to be added or replaced on existing bridges, modification may be required to the pavement seats. Either the new bridge approach slab will be pinned to the existing pavement seat, or attached with approach anchors with a widened pavement seat. Pinning is a beneficial option when applicable as it reduces the construction cost and time.

The pinning option is only allowed on semi-integral abutments as a bridge approach slab addition or retrofit to an existing bridge. Figure 10.6.6-1 shows the pinning detail. As this detail eliminates the expansion joint between the bridge approach slab and the bridge, the maximum bridge superstructure length is limited to 150′. The WSDOT State Bridge Design Engineer may modify this requirement on a case by case basis. Additionally, if the roadway end of the bridge approach slab is adjacent to PCCP roadway, then the detail shown in Figure 10.6.6-2 applies. PCCP does not allow for as much movement as HMA and a joint is required to reduce the possibility of buckling.

When pinning is not applicable, then the bridge approach slab shall be attached to the bridge with approach anchors. If the existing pavement seat is less than 10 inches, the seat shall be modified to provide at least 10 inches of seat width. The WSDOT State Bridge Design Engineer may modify this requirement on a site-specific basis. Generic pavement seat repair details are shown in Appendix 10.6-A2-1 for a concrete repair and Appendix 10.6-A2-2 for a steel T-section repair. These sheets can be customized for the project and added to the Bridge Plans.

When a bridge approach slab is added to an existing bridge, the final grade of the bridge approach slab concrete shall match the existing grade of the concrete bridge deck, including bridges with asphalt pavement. The existing depth of asphalt on the bridge shall be shown in the Plans and an equal depth of asphalt placed on a new bridge approach slab. If the existing depth of asphalt is increased or decreased, the final grade shall also be shown on the Plans.

Figure 10.6.6-1 Pinned Approach Slab Detail

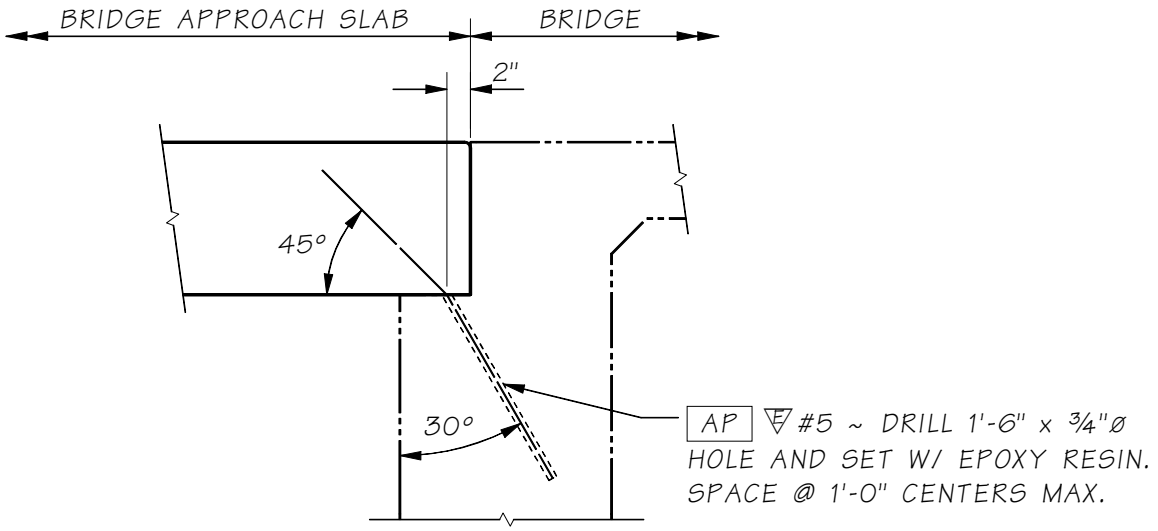

Figure 10.6.6-2 PCCP Roadway Dowel Bar Detail

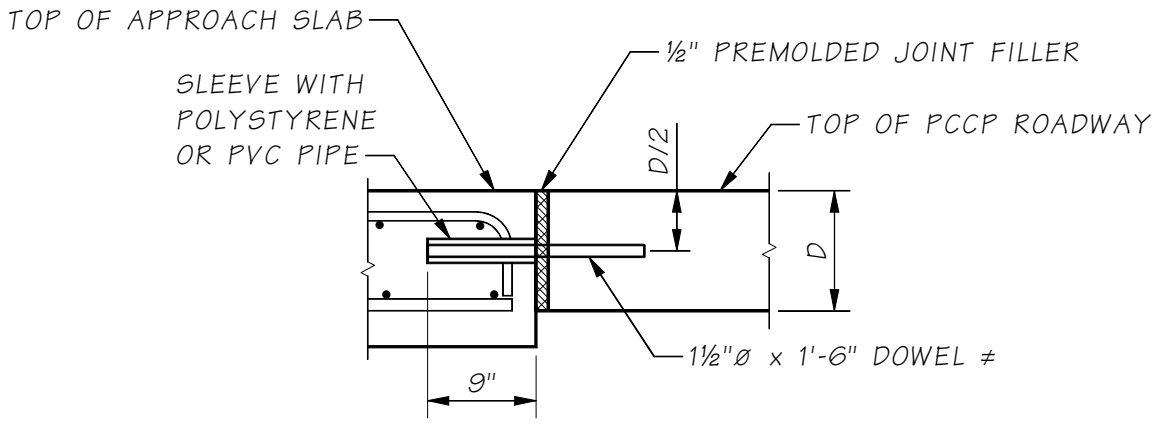

INSERT DOWELS PARALLEL TO CENTER LINE
ALONG TRANSVERSE CONSTRUCTION JOINT.

≠ DRILL 1¾"ø HOLE AND SET WITH EPOXY RESIN
IF PLACED INTO EXISTING PCCP ROADWAY.

10.6.7 Bridge Approach Slab Staging

Staging plans will most likely be required when adding or retrofitting approach slabs on existing bridges. The staging plans shall be a part of the bridge plans and shall be on their own sheet. Coordination with the Region is required to ensure agreement between the bridge staging sheet and the Region traffic control sheet. The longitudinal construction joints required for staging shall be located on lane lines. As there may not be enough room to allow for a lap splice in the bottom transverse bars, a mechanical splice option shall be added. If a lap splice is not feasible, then only the mechanical splice option shall be given. See Figure 10.6.6-3.

Figure 10.6.6-3 Alternate Longitudinal Joint Detail

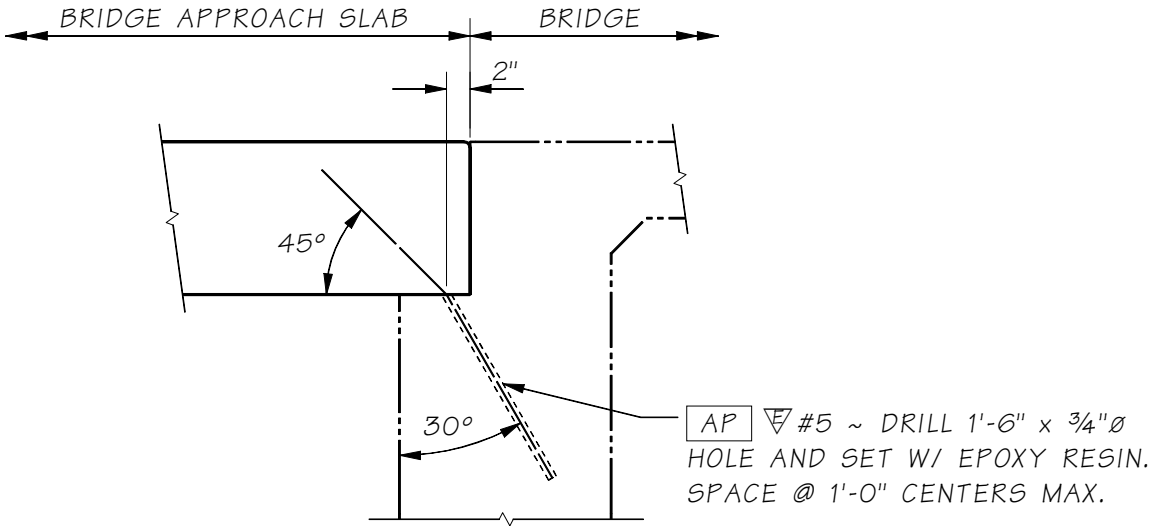

10.7 Traffic Barrier on Bridge Approach Slabs

Placing the traffic barrier on the bridge approach slab is beneficial for the following reasons.

- The bridge approach slab resists traffic impact loads and may reduce wing wall thickness
- Simplified construction and conduit placement
- Bridge runoff is diverted away from the abutment

Most bridges will have some long-term differential settlement between the approach roadway and the abutment. Therefore, a gap between the bridge approach slab and wing (or wall) shall be shown in the details. The minimum gap is twice the long-term settlement, or 2 inches as shown in Figure 10.7-1. A 3 inch gap is also acceptable.

When the traffic barrier is placed on the bridge approach slab, the following barrier guidelines apply.

- Barrier shall extend to the end of the bridge approach slab
- Conduit deflection or expansion fittings shall be called out at the joints
- Junction box locations shall start and end in the approach
- The top transverse reinforcing in the slab shall be sufficient to resist a traffic barrier impact load. A 6′-0″ (hooked) #6 epoxy coated bar shall be added to the approach slab as shown in Figure 10.7-1.

Figure 10.7-1

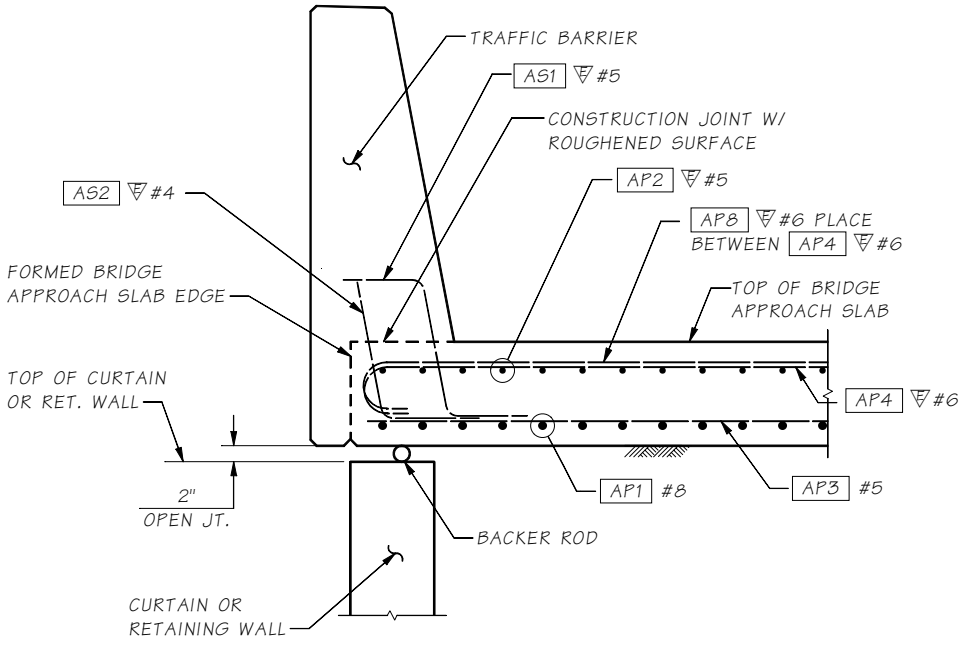

10.7.1 Bridge Approach Slab over Wing Walls, Cantilever Walls or Geosynthetic Walls

All walls that are cast-in-place below the bridge approach slab should continue the barrier soffit line to grade. This includes geosynthetic walls that have a cast-in-place fascia. Figure 10.7.1-1 shows a generic layout at an abutment. Note the sectional Gap Detail, Figure 10.7-1 applies.

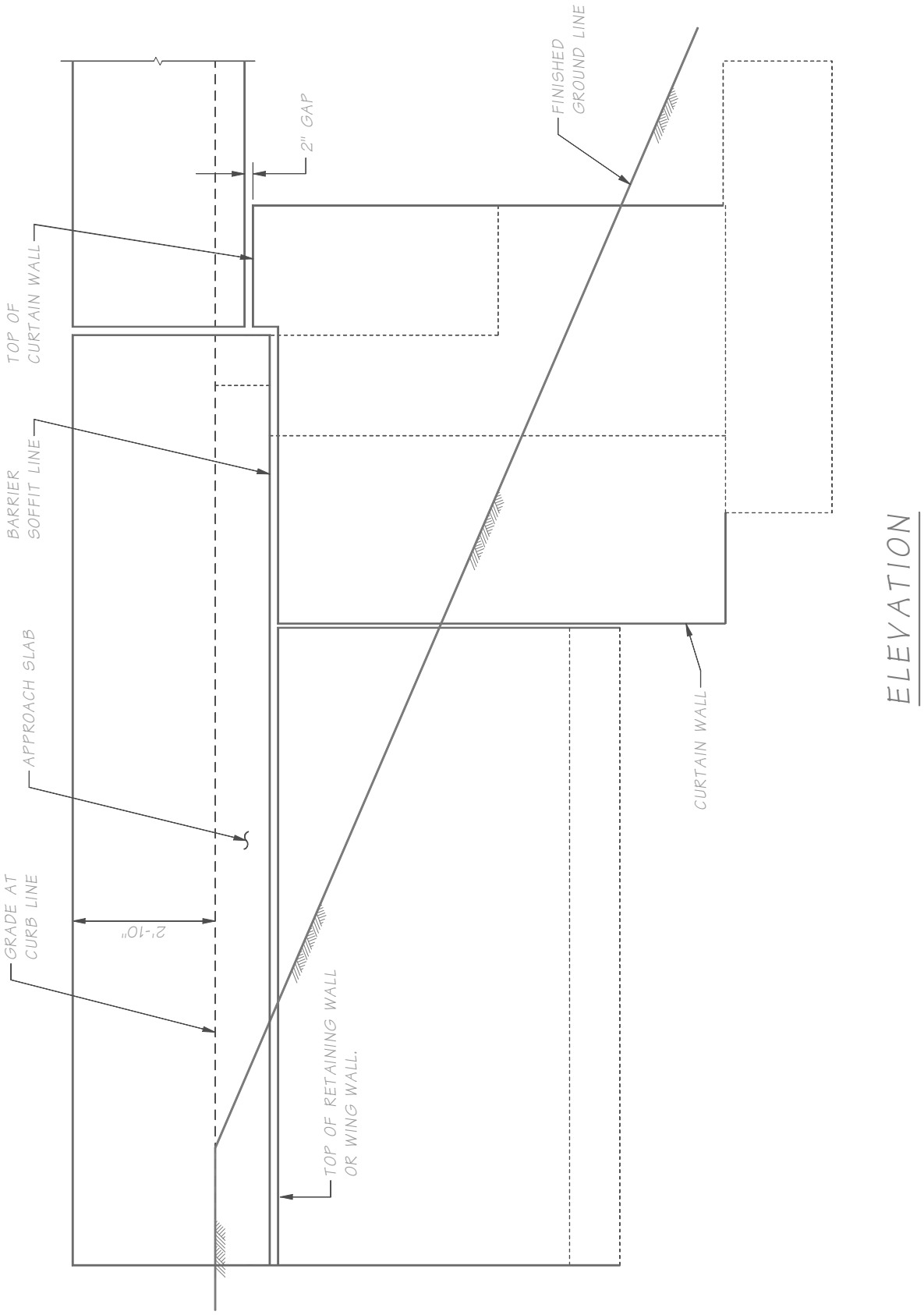

Figure 10.7.1-1

10.7.2 Bridge Approach Slab over SE Walls

The tops of structure earth (SE) walls are uneven and shall be covered with a fascia to provide a smooth soffit line. Usually SE walls extend well beyond the end of the approach slab and require a moment slab. Since SEW barrier is typically 5′-0″ deep from the top of the barrier, the soffit of the SEW barrier and bridge barrier do not match. The transition point for the soffit line shall be at the bridge expansion joint as shown in Figure 10.7.2-2. This requires an extended back side of the barrier at the approach slab to cover the uneven top of the SE wall.

Battered wall systems, such as block walls, use a thickened section of the curtain wall to hide some of the batter. The State Bridge and Structures Architect will provide dimensions for this transition when required.

Figure 10.7.2-1

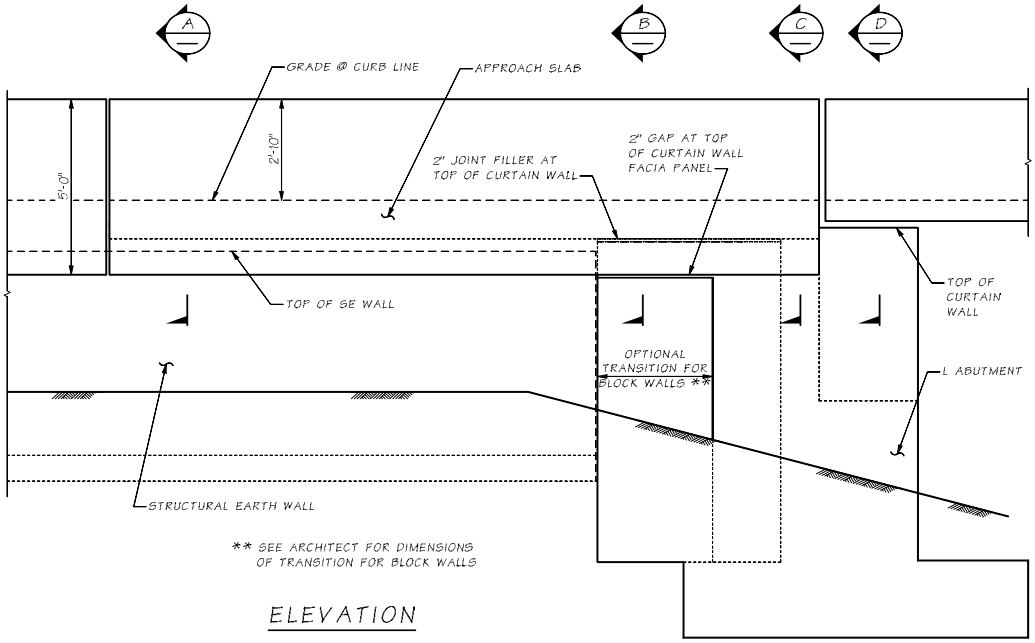

Figure 10.7.2-2

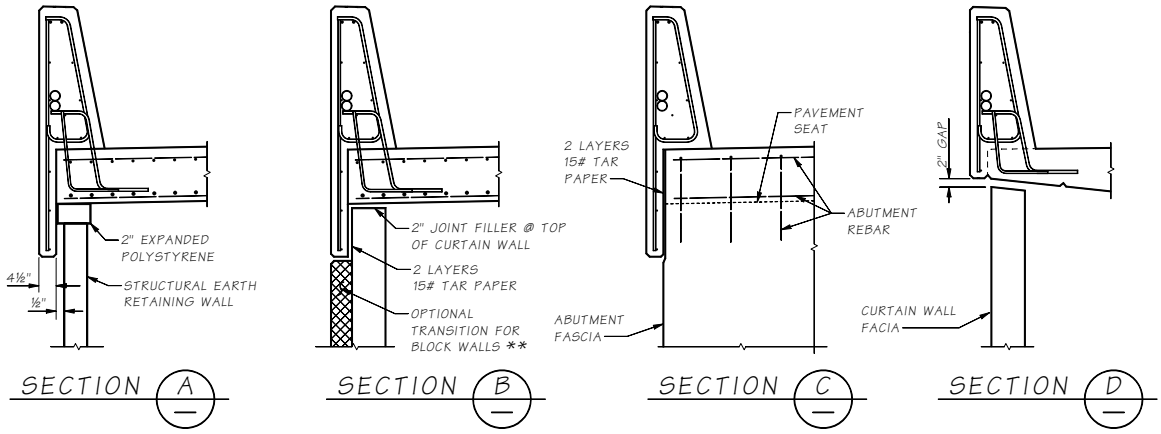

10.8 Utilities Installation on New and Existing Structures

10.8.1 General Concepts

The utilities included under this section are those described in *Standard Specifications* Section 6-01.10. The Bridge designer shall determine if the utility may be attached to the structure and the location. Bridge plans shall include all hardware specifications and details for the utility attachment as provided in any written correspondence with the utility and the utility agreement coordinated by the WSDOT Region Utility Engineer with the associated utility.

10.8.1.A Responsibilities of the Utility Company

The Region or utility company will initiate utility installations and provide design information. The utility company shall be responsible for calculating design stresses in the utility and design of the support system. Utility support design calculations with a State of Washington Professional Engineer stamp, signed and dated, shall be submitted to the Bridge and Structures Office for review. The following information shall be provided by the utility company and shown in the final Bridge Plans.

- Location of the utility outside the limits of the bridge structure
- Number of utilities, type, size, and weight (or Class) of utility lines
- Utility minimum bending radius for the conduit or pipeline specified

Utility General Notes and Design Criteria are stated in Form 224-047. See Figure 10.8.1-1. This form outlines most of the general information required by the utility company to design their attachments. The Bridge Office will generally provide the design for lightweight hanger systems, such as electrical conduits, attached to new structures.

10.8.1.B Confined Spaces

A confined space is any place having a limited means of exit that is subject to the accumulation of toxic or flammable contaminants or an oxygen deficient environment. Confined spaces include but are not limited to pontoons, box girder bridges, storage tanks, ventilation or exhaust ducts, utility vaults, tunnels, pipelines, and open-topped spaces more than 4 feet in depth such as pits, tubes, vaults, and vessels.

10.8.1.C Coating and Corrosion Protection

When the bridge is to receive pigmented sealer, consideration shall be given to painting any exposed utility lines and hangers to match the bridge. When a pigmented sealer is not required, steel utility conduits and hangers shall be painted or galvanized for corrosion protection. The special provisions shall specify cleaning and painting procedures.

Figure 10.8.1-1 General Notes and Design Criteria for Utility Installations to Existing Bridges WSDOT Form 224-047

Washington State Department of Transportation

General Notes and Design Criteria for Utility Installations to Existing Bridges

General Notes

All materials and workmanship shall be in accordance with the requirements of the state of Washington, Department of Transportation, Standard Specifications for Road, Bridge, and Municipal Construction, current edition. The utility conduits shall be labeled in accordance with Section 6-01.10.

All steel in utility supports, including fastenings and anchorages, shall be galvanized in accordance with AASHTO M-111 or M-232 (ASTM A-123 or A-153 respectively).

All utilities and utility support surfaces, including any galvanized utilities, shall be painted in accordance with Standard Specifications Section 6-07. The final coat shall match the bridge color.

Galvanized metal or aluminum utilities completely hidden from public view may be exempted from the above painting requirements.

Any painted surfaces damaged during construction shall be cleaned and painted as noted above.

Any paint splatters shall be removed from the bridge.

Appearance of the utility installation shall be given serious consideration in all cases. Where possible, the utility installation shall be hidden from public view.

The notes and criteria explained here are presented as a guide only. Each proposed utility installation shall be submitted to the Department of Transportation for approval on an individual basis. Compliance with these criteria does not assure approval, nor does variance from these criteria, for reasonable cause, necessarily exclude approval.

Design Criteria

1. Pipelines carrying volatile fluids through a bridge superstructure shall be designed by the utility company in accordance with WAC 480-93, Gas Companies - Safety, and Minimum Federal Safety Standard, Title 49 Code of Federal Regulations (CFR) Section part 192. WAC 468-34-210, Pipelines - Encasement, describes when casing is required for carrying volatile fluids across structures. Generally, casing is not required for pipelines conveying natural gas per the requirements of WAC 468-34-210. If casing is required, then WAC 468-34-210 and WAC 480-93-115 shall be followed.
2. Utilities shall not be attached above the bridge deck nor attached to railing or rail posts.
3. Utilities shall not extend below bottom of superstructure.
4. The utilities shall be provided with suitable expansion devices near bridge expansion joints and/or other locations as required to prevent temperature and other longitudinal forces from being transferred to bridge members.
5. Rigid conduit shall extend 10 feet (3 meters) minimum, beyond the end of the bridge abutment.
6. Utility supports shall be designed such that neither the conduit, the supports, nor the bridge members are overstressed by any loads imposed by the utility installation.
7. Utility locations and supports shall be designed so that a failure (rupture, etc.) will not result in damage to the bridge, the surrounding area, or be a hazard to traffic.
8. Conduit shall be rigid.

   (Items 1 through 8 may be cross-referenced with Bridge Design Manual, Utilities Section.)
9. Lag screws may be used for attaching brackets to wooden structures. All bolt holes shall meet the requirements of Sections 6-04.3(4) and 6-04.3(5) of the Washington State Department of Transportation Standard Specifications for Road, Bridge, and Municipal Construction, current edition.

Exhibit "_____"

Permit/Franchise _____

DOT Form 224-047
Revised 05/2018

Page _____ of _____

Figure 10.8.1-1 General Notes and Design Criteria for Utility Installations to Existing Bridges WSDOT Form 224-047 (continued)

10. Welding across main members will not be permitted. All welding must be approved.
11. Utilities shall be located to minimize bridge maintenance and bridge inspection problems.
12. Attach conduits or brackets to the concrete superstructure with resin bond anchors. Lag screws shall not be used for attachment to concrete.
13. Drilling through reinforcing steel will not be permitted. If steel is hit when drilling, the anchorage location must be moved and the abandoned hole filled with nonshrink grout conforming to the requirements of Section 9-20.3(2) and placement shall be as required in Section 6-02.3(20) of the Washington State Department of Transportation Standard Specifications for Road, Bridge, and Municipal Construction, current edition .
14. There shall be a minimum of 3 inches (80 millimeters) edge distance to the center line of bolt holes in concrete.
15. All utilities and utility supports shall be designed not only to support their dead load but to resist other forces from the utility (surge, etc.) and wind and earthquake forces. The utility company may be asked to submit one set of calculations to verify their design forces.
16. Drilling into prestressed concrete members for utility attachments shall not be allowed.
17. Water or sewer lines to be placed lower than adjacent bridge footings shall be encased if failure can cause undermining of the footing.

Exhibit "_____"

Permit/Franchise _____

DOT Form 224-047
Revised 05/2018

Page _____ of _____

10.8.2 Utility Design Criteria

All utilities shall be designed to resist Strength and Extreme Event Limits States. This includes and is not limited to dead load, expansion, surge, and earthquake forces. Designers shall review WSDOT Form 224-047 "*General Notes and Design Criteria for Utility Installations to Existing Bridges*" and the items in this section when designing a utility system or providing a review for an existing bridge attachment. See Figure 10.8.1-1 and Section 10.9 Utility Review Procedure for Installation on Existing Bridges.

The Bridge Engineer shall review the utility design to ensure the utility support system will carry all transverse and vertical loading. Loading will include (and is not limited to): dead load, temperature expansion, dynamic action (water hammer), and seismic inertial load. Positive resistance to loads shall be provided in all directions perpendicular to and along the length of the utility as required by the utility engineer.

Where possible, dynamic fluid action loads shall be resisted off the bridge. If these loads must be resisted on the bridge, the utility engineer shall be involved in the design of these supports. The utility engineer shall determine these design forces being applied to the bridge. Realize these forces can be generated in any pipe supporting moving fluids, which may include, but are not limited to: water, sewer, storm water, and fire suppression systems.

Where utilities are insulated, the insulation system shall be designed to allow the intended motion range of the hardware supporting the utility. This will prevent unanticipated stresses from being added to the hanger in the event the insulation binds up the hardware.

10.8.2.A Utility Location

Utilities shall be located, such that a support failure will not result in damage to the structure, the surrounding area, or be a hazard to traffic. In most cases, the utility shall be installed between girders. Utilities and supports shall not extend below the bottom of the superstructure. Utilities shall be installed no lower than 1 foot 0 inches above the bottom of the girders. In some cases when appurtenances are required (such as air release valves), care shall be taken to provide adequate space. The utility installation shall be located so as to minimize the effect on the appearance of the structure. Utilities shall not be attached above the bridge deck nor attached to the railings or posts.

10.8.2.B Termination at the Bridge Ends

Utility conduit and encasements shall extend 10 feet minimum beyond the ends of the structure in order to reduce effects of embankment settlement on the utility and provide protection in case of future work involving excavation near the structure. This requirement shall be shown on the plans. Utilities off the bridge must be installed prior to paving of approaches. This should be stated in the Special Provisions.

10.8.2.C Utility Expansion

The utilities shall be designed with a suitable expansion system as required to prevent longitudinal forces from being transferred to bridge members.

Water mains generally remain a constant temperature and are anchored in the ground at the abutments. However, the bridge will move with temperature changes and seismic forces. Pipe support systems shall be designed to allow for the bridge movements. For short bridges, this generally means the bridge will move and the utility will not since it is anchored at the abutments. For long bridges that require pipe expansion joints, design shall carefully locate pipe expansion joints and the corresponding longitudinal load-carrying support.

Electrical conduits that use PVC shall have an expansion device for every 100 foot of pipe due to the higher coefficient of expansion. If more than two joints are specified, a cable or expansion limiting device is required to keep the ends from separating.

10.8.2.D Utility Blockouts

Blockouts shall be provided in all structural members that prohibit the passage of utilities, such as girder end diaphragms, pier crossbeams, and intermediate diaphragms. These blockouts shall be large enough to fit deflection fittings, and shall be parallel to the utility. For multiple utilities, a note shall be added to the plans that the deflection fittings shall be staggered such that no fitting is located adjacent to another, or the blockouts shall be designed to fit both fittings. Expansion fittings shall be staggered.

10.8.2.E Gas Lines or Volatile Fluids

Pipelines carrying volatile fluids through a bridge superstructure shall be designed by the utility company in accordance with WAC 480-93, Gas Companies—Safety, and Minimum Federal Safety Standard, Title 49 Code of Federal Regulations (CFR) Section part 192. WAC 468-34-210, Pipelines—Encasement, describes when casing is required for carrying volatile fluids across structures. Generally, casing is not required for pipelines conveying natural gas per the requirements of WAC 468-34-210. If casing is required, then WAC 468-34-210 and WAC 480-93-115 shall be followed.

10.8.2.F Water Lines

Transverse support or bracing shall be provided for all water lines to carry Strength and Extreme Event Lateral Loading. Fire control piping is a special case where unusual care must be taken to handle the inertial loads and associated deflections. The Utility Engineer shall be involved in the design of supports resisting dynamic action loads and deflections.

In box girders (closed cell), a rupture of a water line will generally flood a cell before emergency response can shut down the water main. This shall be designed for as an Extreme Event II load case, where the weight of water is a dead load (DC). Additional weep holes or open grating shall be considered to offset this Extreme Event (see Figure 10.8.3-1). Full length casing extending 10-feet beyond the end of the bridge approach slab shall be considered as an alternate to additional weep holes or open grating.

10.8.2.G Sewer Lines

Sewer lines shall meet the same design criteria as waterlines. Encasement pipe is required for sewer lines on bridges that cross over water or roads. See the utility agreement or the Hydraulic Section for types of sewer pipe material typically used.

10.8.2.H Electrical (Power and Communications)

Telephone, television cable, and power conduit shall be galvanized Rigid Metal Conduit (RGS) or Rigid Polyvinyl Chloride Conduit (PVC). Where such conduit is buried in concrete curbs or barriers or has continuous support, such support is considered to be adequate. Where hangers or brackets support conduit at intervals, the maximum distance between supports shall be 5 feet.

10.8.3 Box/Tub Girder Bridges

Utilities shall not be placed inside reinforced concrete box girders with less than 4 feet inside clear height and all precast prestressed concrete tub girders because reasonable access cannot be provided. Utilities shall be located between girders or under bridge deck soffit in these cases. Inspection lighting, access and ventilation shall always be provided in girder cells containing utilities. Refer to the concrete and steel chapters for additional details.

Special utilities (such as water or gas mains) in box girder bridges shall use concrete pedestals. This allows the utility to be placed, inspected, and tested before the deck is cast. See Figure 10.8.3-1. Concrete pedestals consist of concrete supports formed at suitable intervals and provided with some type of clamping device. Continuous supports shall be avoided due to the very high cost and additional dead load to the structure.

Figure 10.8.3-1 Concrete Utility Supports

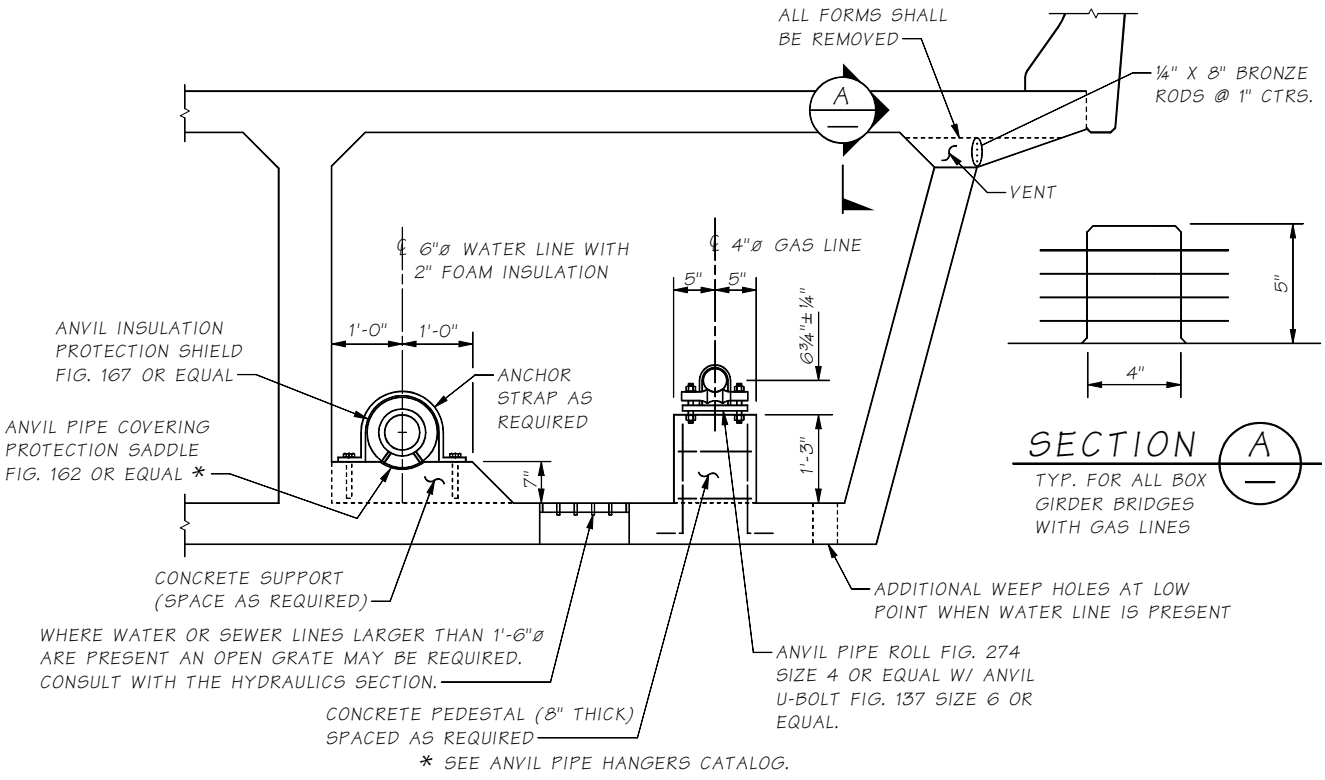

10.8.4 Traffic Barrier Conduit

All new bridge construction shall install two 2-inch galvanized Rigid Metal Conduit (RGS) or Rigid Polyvinyl Chloride Conduit (PVC) in the traffic barriers. These conduits generally carry wiring for Traffic Signals (TS) and Lighting (LT). Other wiring may be installed or the conduit may be used for future applications. PVC conduit may be used only in stationary-form barriers, and will connect to RGS using a PVC adaptor when exiting the barrier. RGS conduit may be used in stationary-form barriers, but it shall be used in slipform barriers.

Each conduit shall be stubbed-out into its own concrete junction box at each corner of the bridge. The Bridge Plans must show the placement of the conduits to clear the structure or any foreseeable obstructions.

The galvanized steel conduit shall be wrapped with corrosion resistant tape at least one foot inside and outside of the concrete structure, and this requirement shall be so stated on the plans. The corrosion resistant tape shall be 3M Scotch 50, Bishop 5, Nashua AVI 10, or approved equal. The usual location of the conduit throughout the remainder of the bridge should be in the traffic barrier.

Pull boxes shall be provided within the barrier for each conduit at each end of the bridge and at a maximum spacing of 200 feet. For fiber optics only, spacing shall not exceed 360 feet. The pull box size shall conform to the specifications of the National Electric Code or be a minimum of 8 inches by 8 inches by 18 inches to facilitate pulling of wires. Galvanized steel pull boxes (or junctions boxes) shall meet the specifications of the "NEMA Type 4X" standard for stationary-form barrier, shall meet the specifications of the "NEMA 3R" and be adjustable in depth for slip form barrier, and the NEMA junction box type shall be stated on the plans. Stainless steel pull boxes may be used as an option to the galvanized steel.

In the case of existing bridges, an area 2 feet in width shall be reserved for conduit beginning at a point either 4 feet or 6 feet outside the face of usable shoulder. The fastening for and location of attaching the conduit to the existing bridge shall be worked out on a job-by-job basis.

10.8.5 Conduit Types

All electrical conduits shall be galvanized Rigid Metal Conduit (RGS) or Rigid Polyvinyl Chloride Conduit (PVC). Fiberglass conduits are not permitted.

Steel Pipe – All pipe and fittings shall be galvanized except for special uses.

PVC Pipe – PVC pipe may be used with suitable considerations for deflection, placement of expansion fittings, and of freezing water within the conduits. PVC pipe shall not be placed in concrete traffic barriers when the slip form method is used due to damage and pipe separation that often occurs during concrete placement.

10.8.6 Utility Supports

Selection of a particular support type shall be based on the needs of the installation and the best economy. All utility installations shall address temperature expansion in the design of the system or expansion devices. Clamped type of supports are not permitted.

Designs shall provide longitudinal and transverse support for loads from gravity, earthquakes, temperature, inertia, etc. It is especially important to provide transverse and longitudinal support for inserts that cannot resist moment.

Vertical supports shall be spaced at 5 foot maximum intervals for telephone and power conduits, and at a spacing to resist design loads for all other utilities. Conduits which are 4 inch in diameter and greater shall use Schedule 40 steel and supported at a maximum spacing of 8 feet if the design loads permit. This requirement is to minimize the number of attachments to the structure.

10.8.6.A Pipe Hangers

Utility lines shall be suspended by means of cast-in-place inserts, whenever possible. This is the most common type of support for utilities to be supported under the bridge deck. This allows the use of standard cast-in-place inserts and is very flexible in terms of expansion requirements. For heavy pipes over traffic (10″ water main or larger), a Safety Factor of 1.5 should be used to resist vertical loads for Strength Design. This is to avoid complete failure of the utility hanger system by failure of one hanger. Vertical inserts will not provide resistance to longitudinal forces. Longitudinal and transverse supports shall be provided for ITS conduits.

When ¾″ or ⅞″ diameter hanger rods are suspended from cast-in-place inserts, at least three of the following inserts shall be identified: Cooper B-Line B22-I Series, Unistrut 3200 Series, Powerstrut 349 Series, Halfen HT5506 or similar. The specific cast-in-place insert within each series shall be identified based on the required length of insert. The cast-in-place insert shall be at least 6″ long and hot dipped galvanized in accordance with AASHTO M 111 or ASTM F2329.

The insert shall not interfere with reinforcement in the bridge deck. The inserts shall be installed level longitudinally and transversely. When the superelevation of the roadway is not significant, a single, long insert may be used to support multiple hanger rods. When the superelevation becomes significant, a single insert may be used for each hanger.

Occasionally large diameter utilities require pipe rolls that only fit on 1″ diameter hanger rods. When 1″ diameter hanger rods are required, the Anvil Fig. 286 and Unistrut P3246 insert shall be used. The designer shall only specify this insert when absolutely necessary.

The Bridge Engineer shall verify that the cast-in-place insert has sufficient capacity to support the loads from the hanger rod.

Transverse supports may be provided by a second hanger extending from a girder or by a brace against the girder. Bridge Standard Drawings 10.8-A1-1 and 10.8-A1-2 depict typical utility support installations and placement at abutments and diaphragms. Transverse supports shall, at a minimum, be located at every other vertical support.

Drilling into prestressed concrete members for utility attachments or lateral supports shall not be permitted.

10.8.6.B Surface Mounting

Utilities to be installed on existing structures that cannot be located between girders may be mounted under the deck soffit. Utilities shall not be attached above the bridge deck nor attached to the railings or posts. Adhesive anchor shall be used and design in accordance with Section 10.10.

Bridge Standard Drawing 10.8-A1-3 shows typical mounting locations for concrete beam of box girder bridges. Anchors shall be located 3” minimum from the edge of deck or other concrete surfaces.

10.9 Review Procedure for Utility Installations on Existing Structures

Utility companies typically submit proposed attachments to WSDOT's structures to the Region's Utility offices, which in turn forward to the Bridge Preservation Office (BPO) for review. BPO is responsible for reviewing only those details pertaining to the bridge crossing such as attachment details or trenching details adjacent to bridge piers or abutments.

The Bridge Preservation Office reviews proposed utility attachments and either approves the attachment or returns for correction (RFC). A current file for most utility attachments is maintained in the Bridge Preservation Office. The turnaround time for reviewing the proposals should not exceed four weeks.

Utility attachments, which exert moments or large forces at the supports, shall be accompanied by at least one set of calculations from the utility company. Bridge attachments designed to resist surge forces shall always be accompanied by calculations. The connection details shall be designed to successfully transfer all forces to the bridge without causing overstress in the connections or to the bridge members to which they are attached. For large utilities, the bridge itself shall have adequate capacity to carry the utility without affecting the live load capacity.

The engineer may request calculations from the utility company for any attachment detail that may be questionable. All plans, details, and calculations shall be stamped, signed, and dated by a Professional Engineer licensed in the State of Washington. Additionally, for heavier utilities, such as waterlines or sewer lines, the engineer may request a load rating of the structure, which shall be stamped, signed, and dated by a licensed professional engineer in the state of Washington to follow the guidelines of Chapter 13. The ratings shall be based solely on the engineer of record calculations.

Guidelines for Utility Companies

Detailing guidelines for utility companies to follow when designing utility attachments are listed in WSDOT Form 224-047, "*General Notes and Design Criteria for Utility Installations to Existing Bridges*." See Figure 10.8.1-1. See Section 10.8 for other requirements, which include, but are not limited to: design of utility, material used, and spacing of supports.

Water lines and sewer lines installed within box girders shall have full length casing extending 10-feet beyond the end of the bridge approach slab. The casing shall be sufficient to prevent the flooding of a cell upon a utility line rupture.

Guidelines for Column Attachments

The following guidelines shall be followed for installing attachments to columns.

- Attachments on round columns may be either drilled and bolted or banded.
- Attachments on non-circular column shapes shall be drilled and bolted.
- Only percussion drilling methods shall be allowed on bridge columns, and only for small diameter resin bonded anchor installation (0.50″ diameter max.). Drilling will normally result in blind holes, and these holes shall be patched with material conforming to *Standard Specifications* Section 6-02.3(20).
- Drilling into prestressed or post-tensioned concrete elements is not permitted. Some WSDOT bridges utilize prestressed columns.

Any proposed conduit installation on a WSDOT bridge structure shall be reviewed and approved by the Risk Reduction Engineer in the Bridge Preservation Office. If the conduit installation originates via a change order, then the Headquarters Construction Office may provide approval, and shall inform the Risk Reduction Engineer of the decision.

10.9.1 Utility Review Checklist

This checklist applies to all proposed utility attachments to existing bridges.

1. Complete cursory check to become familiar with the proposal.
2. Determine location of existing utilities.
   A. Check Bridge Inspection Report for any existing utilities.
   B. Check Bridge Preservation's Office's utility file for any existing utility permits or franchises and possible as-built plans.
   C. Any existing utilities on the same side of the structure as the proposed utility shall be shown on the proposal.
3. Review the following:
   A. Layout that includes dimension, directions, SR number and bridge number.
   B. Adequate spacing of supports.
   C. Adequate strength of supports as attached to the bridge (calculations may be necessary).
   D. Maximum design pressure and regular operating pressure for pressure pipe systems.
   E. Adequate lateral bracing and thrust protection for pressure pipe systems.
   F. Does the utility obstruct maintenance or accessibility to key bridge components?
   G. Check location (elevation and plan view) of the utility with respect to pier footings or abutments. If trench limits encroach within the 45° envelope from the footing edge, consult the Materials Lab.
   H. Force mains or water flow systems may require encasement if they are in excavations below the bottom of a footing.
4. Write an email to the Region when "Approved" or "Approved as Noted". Stamp and date the plans using the same date as shown on the email.
5. Create a file folder on the server under Risk Reduction\Utilities with the bridge number. For each utility on the same structure, create a subfolder with utility name. Place approved plans and any other pertinent information used in the review process in the folder.

10.10 Anchors for Permanent Attachments

Cast-in-place concrete anchors are the preferred option for new construction in bridge applications.

The design procedure for cast-in-place and post-installed anchors shall be in accordance with LRFD-BDS 5.13. Adhesive and undercut anchors shall meet the assessment criteria in accordance with ACI 355.4 and ACI 355.2, respectively.

WSDOT allows conventional adhesive anchors systems (resin bonded anchors) and post installed undercut anchors for permanent attachments in many aspects of bridge design, including the permanent cyclical or sustained tension applications listed below.

- Bridge mounted sign brackets with a maximum cantilever length or total span of 10 feet.
- Light standards with a maximum cantilever length of 16 feet.
- Sign structures with a supporting, round or rectangular, post or beam with a maximum dimension of 8 inches.
- Retrofitted corbels for bridge approach slabs.
- Supporting utilities under bridges, including water pipes, electrical conduit and other utility piping systems.

Adhesive anchors shall not be used in monotube sign structure, sign structure truss, and mast arm type signal standard applications. Fast set resin bonding materials shall not be used for adhesive anchors.

For carbon steel undercut anchors, hot-dip galvanized components are preferred, but not currently available from suppliers. Undercut anchors with electroplated zinc coatings are not considered equivalent or better and shall not be used. Therefore, stainless steel undercut anchors are the preferred option.

Expansion anchors and mechanical anchors are not allowed for any permanent applications, except for specific connection details previously approved by the Bridge and Structures Office for precast concrete panel faced structural earth walls as low risk applications.

10.11 Drainage Design

Even though it is rare that poor drainage is directly responsible for a structural failure, it still must be a primary consideration in the design. Poor drainage can cause problems such as ponding on the roadway, erosion around abutments, and early deterioration of structural members. Collecting the runoff and transporting it away from the bridge can prevent most of the problems, thus reducing future maintenance and rehabilitations costs. Proper geometrics during the preliminary stage is essential in order to accomplish this. The Bridge and Structures Office recommends placing the bridge deck drainage off of the structure. All expansion joints shall be watertight.

10.11.1 Geometrics

Bridges shall have sufficient transverse and longitudinal slopes to allow the water to run quickly to the drains. A transverse slope of .02′/ft and longitudinal slope of 0.5 percent for minimum valves are required for new bridges. Avoid placing sag vertical curves and superelevation crossovers on the structure that could result in hydroplaning conditions or, in cold climates, sheets of ice from melting snow. The use of unsymmetrical vertical curves may assist the designer in shifting the low point off the structure.

10.11.2 Hydrology

Contact the Hydraulic Branch for hydraulic design requirements.

10.11.3 On Bridge Systems

Drains shall only be placed on bridge structures when required by bridge deck drainage hydraulics analysis and where alignment and superelevation geometry cannot be adjusted to compensate. Coordinate with the Hydraulics designer for the drainage needs associated with bridge decks and to determine the size of drain required.

Bridge drainage systems shall be comprised of Neenah Foundry deck drains/bridge scuppers, fiberglass-reinforced plastic (FRP) drainpipe, ductile iron drainpipe, or a combination of both drainpipes unless otherwise approved by the State Bridge Design Engineer.

10.11.3.A Design

1. The bridge drain system shall be designed for vertical loading, wind loading, and seismic inertia considering the following.
    a. Drain system self-weight plus the pipe full of water.
    b. Drain system self-weight plus the pipe full of water and one-third full of saturated soil/debris.
    c. The drain system support elements shall have a Service Factor of Safety not less than 2.0 and an Extreme Event Factor of Safety not less than 1.5.
    d. Deflection of horizontal pipe runs shall be limited to L/400. “L” is the length between centerline of support hangers.
2. Horizontal pipes shall have vertical supports located at 9 feet maximum. Pipe size and loading conditions may require more closely spaced supports.
3. For new structures, widened structures, or deck rehabilitations with a cast-in-place bridge deck, galvanized or stainless steel concrete inserts shall be cast into the deck to support vertical hangers.

4. For existing structures with an existing concrete bridge deck, vertical hangers shall be supported utilizing spring nuts and steel channels similar to Standard Plan J-60.13, except straps shall be replaced with threaded rods. The material type for all elements of the steel channels, spring nuts, wedge plates or washers (if required), and concrete anchors shall be either all galvanized or all stainless steel. The steel channels shall be placed level and attached to the underside of the bridge deck overhang utilizing resin bonded anchors or undercut anchors. Where necessary, wedge plates or wedge washers shall be used to facilitate leveling the steel channel. Resin bonded anchors shall be in accordance with *Standard Specifications* Section 6-02.3(18)A. The steel channels shall be structurally checked for the design loads.
5. Horizontal pipes shall have transverse supports located at 18 feet maximum. Transverse supports shall be either connected to the deck if the overhang width is sufficient such that the transverse support is placed at a minimum 30-degree angle or shall be connected to the adjacent girder.
6. Horizontal pipes shall have longitudinal support brackets located at 200 feet maximum and shall be located on the upslope side of all expansion joints. At least one longitudinal support bracket shall be provided for each horizontal run of pipe for runs less than 200 feet.
7. Horizontal pipes shall have a 1 percent minimum slope unless otherwise approved by the Hydraulic Engineer. When possible, drain runs shall match the profile grade to allow for constant hanger support lengths throughout the pipe run.
8. Bottom of the horizontal pipe, fittings, and supports shall not extend below the bottom of the girder
9. Bolted flanged connections shall be used where ductile iron pipe connects to FRP drainpipe.
10. Cleanouts shall be located at the ends of the horizontal pipe runs and at a minimum of 200 feet unless conditions or maintenance require more restrictive spacing.
11. Pipes shall be the same color as the adjacent girder. Pipes attached to crossbeams, columns, or abutments shall be the same color as the element to which they are attached, which will typically be a Washington Gray.
12. Support anchors post drilled in the deck shall be resin bonded anchors in accordance with *Standard Specifications* Section 6-02.3(18)A or undercut anchors.

10.11.3.B Cast Iron/Ductile Iron Drain and Drainpipes

1. Projects utilizing ductile iron drainpipe shall incorporate into the Contract Provisions the Special Provision language on painting ductile iron. Contact the Bridge Office S&E Engineer for the latest version.
2. Deck bridge drain/scupper assemblies shall be cast iron manufactured by the Neenah Foundry. The engineer shall refer to the list of approved proprietary drains and select one from the list when possible. Follow the link for a list of approved Neenah drains. https://wsdot.wa.gov/engineering-standards/design-topics/design-tools-and-support.
3. Ductile iron pipes and fittings joints shall be joined with flexible grooved end type joint connections.

4. Vertical pipe sections attached to bridge columns or other structures, including the pipe outlet, shall be ductile iron pipe. When FRP pipe is used for horizontal pipe runs, the pipe material shall transition to ductile iron at vertical pipe runs down columns or abutments. Typically, the transition should occur at the top of column, but in no case be less than 15'-0" from groundline.

    a. Vertical pipe sections shall be supported with pipe support brackets spaced at a maximum of 10 feet.

5. When FRP drainpipe is used for the horizontal bridge drainpipe, a 1-foot minimum section of vertical ductile iron or FRP pipe shall be attached to the Neenah bridge drain/scupper utilizing a positive connection. The positive connection shall be comprised of a flanged grooved coupling, a friction connection, or threaded type connection. In some cases, the connection of the drainpipe and bridge drain/scupper will be partially or fully cast into the deck.

6. Expansion fittings shall be designed and located to accommodate movement at the bridge expansion joints.

7. Galvanized steel yoke pipe roll hangers are required for supporting the ductile iron horizontal pipe.

10.11.3.C Fiberglass-Reinforced Plastic (FRP) Drainpipe

1. Projects utilizing FRP drainpipe shall incorporate into the Contract Provisions the Special Provision language specifying construction requirements and materials. Contact the Bridge Office S&E Engineer for the latest version.

2. Expansion fittings shall be designed and located to accommodate movement at the bridge expansion joints and differential movement between the bridge and the FRP drainpipe.

    a. Expansion fitting spacing shall be designed on a project specific basis. Expansion fittings shall be placed at a spacing not to exceed 200 feet maximum.

    b. The coefficient of thermal expansion for FRP drainpipe shall be 0.000014 in./°F.

    c. The maximum and minimum design temperatures to be used for uniform thermal movement effects in both steel and concrete superstructures shall be in accordance with BDM 9.1.2.B for Steel Bridges.

    d. Expansion fittings shall have longitudinal support brackets on the upslope side of the fitting and two transverse support brackets on the downslope side of the fitting. The two transverse brackets shall be spaced at 4D and 14D from the edge of the expansion fitting. "D" is the diameter of the FRP pipe.

    e. Most standard FRP expansion fittings accommodate a total thermal movement of 7-10 inches. The designer shall verify expansion fitting capability with the proprietary manufacturers. Expansion fittings requiring a total thermal movement greater than 7-10 inches shall be comprised of a ductile iron expansion assembly. There are various types of ductile iron expansion fittings and shall be investigated by the Engineer and an appropriate assembly specified on the Plans. A section of ductile iron pipe shall be placed on both sides of the expansion assembly and securely anchored with longitudinal and transverse braces on each end of the expansion assembly to ensure expansion occurs at the fitting. The length of ductile iron pipe shall be the minimum required to reasonably connect

the required bracing or 10 feet. Expansion fittings that are placed in succession or in a series to accommodate total movement that exceeds the capability of one individual expansion fitting shall require a documented plan layout review and acceptance from the expansion fitting proprietary manufacturer.

f. Differential movement between the concrete or steel structure and the FRP drainpipe shall be accommodated by a combination of expansion fittings and movement at each hanger support. Movement at the hanger support can be accomplished by roller supports or by rotation of the clevis hanger. The engineer shall not assume the FRP drainpipe will slide freely through the clevis hanger assembly, it most likely will experience some degree of rotation at the concrete insert. The engineer shall determine the amount of rotation at the clevis hanger assembly and ensure the movement can be tolerated by the concrete insert and be adequate for the calculated differential expansion.

3. The 1-foot minimum section of vertical ductile iron or FRP pipe extending from the bridge drain/scupper shall terminate freely into a concentric collector/reducer. The vertical pipe shall be inserted into the concentric reducer 2 inches minimum to 4 inches maximum. The top diameter of the concentric reducer shall be a minimum of 4 inches larger than the drainpipe. The concentric reducer shall have a galvanized steel or FRP splash guard mechanically connected with a loose chain to the drainpipe. The splash guard shall be a minimum of ¼" thick regardless of material type. The diameter of the splash guard shall be a minimum of 6 inches larger than the top of the concentric reducer and have a hole 1 inch larger than the diameter of the vertical pipe.

4. Galvanized clevis hangers with a galvanized pipe spacer and 0.25 inch thick elastomeric cushion is preferred over steel yoke pipe roll hangers for supporting the FRP horizontal drainpipe. The galvanized pipe spacer shall be schedule 40 and match the bolt diameter. As an alternate to the pipe spacer, additional nuts and lock washers can be added to the inside of the clevis hanger to provide a double nut connection. The elastomeric cushion shall be placed between the FRP pipe and the bottom of the clevis hanger. To limit point loading, the minimum width of the clevis hanger strap supporting the pipe shall be as specified in Table 10.11.3-1. If the width is less than specified, an FRP "wear pad" 1/8" minimum thick with a length equal to one pipe diameter that extends 180 degrees around the bottom of the pipe shall be bonded to the exterior of the pipe. When galvanized steel yoke pipe roll hangers are used, an FRP "wear pad" shall also be bonded to the FRP pipe at the roller support location to distribute the point loading.

   For nominal pipe diameters greater than 24 inches, the use of galvanized clevis hangers is prohibited and galvanized steel yoke pipe roll hangers shall be used with an FRP "wear pad" as described above.

5. All transverse and longitudinal support brackets, offset pipe clamps, and pipe brackets supporting the FRP pipe shall be padded with a 0.25 inch thick elastomeric cushion.

Table 10.11.3-1 Minimum Clevis Hanger Strap Width

Pipe Diameter (in)	4	6	8	10	12	14	16	18	20	24
Clevis Hanger Support Strap Width (in)	1.25	1.5	1.75	1.75	2	2	2.5	2.5	3	3.5

10.11.3.D Plan Sheet Development

1. The Contract Plans and Shop Drawings shall include, but not be limited to, the following.

    a. Plan view of the bridge showing the location of the drainage lines. The plan view shall show arrows indicating direction of water flow next to the drainage lines.

    b. Elevation view(s) of the bridge showing the drainage lines and supports. The elevation views can have break lines between drains and other key features to minimize number of plan sheets.

    c. The maximum angle of an individual pipe fitting shall be 45 degrees. If a 90-degree bend in the pipe run is required, two 45-degree fittings shall be used.

    d. Section views of the bridge showing the drainage lines and supports.

    e. Details showing the location of drilled holes in the steel girder web to accommodate attaching the transverse support brackets. It's preferable to shop drill these holes but maybe field drilled with the approval of the Engineer.

    f. Details showing the location of the blockouts in the concrete girder to accommodate attaching the transverse support. The blockouts are to be installed during fabrication of the girder. The plan shall state whether it is acceptable to re-use the blockout for the deck construction overhang bracket.

    g. For post drilled resin bonded anchors, the plans are to include language prohibiting core drilling, prohibiting drilling through reinforcement, requiring existing reinforcement to be located prior to drilling, and requiring a Type 2 working drawing describing the reinforcement location procedure.

    h. The plans may permit undercut anchors to be substituted for resin bonded anchors if the request is submitted to the Engineer for acceptance and the Contract Provisions include acceptance language in the Special Provisions.

    i. Bridge drainage support details.

    j. Other relevant details as required to construct the bridge drainage system.

10.11.4 Construction

See *Standard Specifications* Section 6-02.3(10)D5 for construction requirements including gutter texture. Gutters shall have an untextured finish (steel trowel).

10.12 Bridge Security

10.12.1 General

Security based bridge design and its direct correlation to modern social issues is addressed in this section. Criminal activity, illegal encampments, graffiti, hindrance to economic development and public eyesore create unwanted expensive. They also pose public health concerns and safety hazards for State Maintenance and Operations practices. The issue exists in urban areas as well as rural and recreational locales.

Bridges are dominant structures in landscapes. They are held to a higher standard of design due to their influence on communities, where economic and social settings are affected by their quality. Initial project cost savings may quickly be overshadowed by increased externalized costs. These externalized costs are born by local municipalities and businesses as well as other departments within WSDOT.

WSDOT bridge inspectors are required to inspect all bridges at least once every 24 months. The presence of the illegal encampments, as well as garbage, hypodermic needles, and feces often makes it impossible to do a close, hands-on inspection of the abutments and bearings of bridges. The Bridge Preservation Office has requested that maintenance clean up transient camps when it becomes difficult or impossible to do an adequate inspection of the bridges. Campfires set by the homeless have also caused damage to bridges.

Bridge Maintenance Crews also face the same difficulty when they need to do repair work on bridges in the urban area. Clean up requires (per law) posting the bridge seventy-two hours prior to any work. Material picked up is tagged, bagged, and stored for retrieval. Often the offenders are back the next day.

10.12.2 Design

Design is determined on a case by case basis using two strategies. These strategies are universally accepted best practices. The first, Crime Prevention through Environmental Design (CPTED), is a multi-disciplinary approach to deterring criminal behavior.

The second, Context Sensitive Design (CSS), is also multi-disciplinary and focuses on project development methods. Multi-disciplinary teams consist of engineers and architects but may include law enforcement, local businesses, social service providers, and psychologists.

1. CPTED principals are based upon the theory that the proper design and effective use of the built environment can reduce crime, reduce the fear of crime, and improve the quality of life. Built environment implementations of CPTED seek to dissuade offenders from committing crimes by manipulating the built environment in which those crimes proceed from or occur. The six main concepts are territoriality, surveillance, access control, image/maintenance, activity support and target hardening. Applying all of these strategies is key when preventing crime in any neighborhood or right-of-way.

   Natural surveillance and access control strategies limit the opportunity for crime. Territorial reinforcement promotes social control through a variety of measures. These may include enhanced aesthetics or public art. Image/maintenance and activity support provide the community with reassurance and the ability to stop crime by

themselves. Target hardening strategies may involve fencing or concrete enclosures or they may include all techniques to resolve crime or chronic trespass into one final step.

2. WSDOT implements FHWA's CSS design development principles through Executive Order E 1028. The CSS methods require designers to consider the physical, economic, and social setting of a project. Stakeholder's interests are to be accounted for; including area residents and business owners.

10.12.3 Design Criteria

New bridges need to address design for the environment by basic criteria:

- Slopes under bridges need to be steep; around a 1:1 slope, and hardened with something like solid concrete so that flat areas cannot be carved into the hillside. Flat areas under bridge superstructures attract inappropriate uses and should be omitted.
- Illegal urban campers have been known to build shelters between the concrete girders. Abutment walls need to be high enough that they deny access to the superstructure elements. When it is not feasible to design for deterrence the sites need to be hardened with fencing buried several feet into the soil or with solid concrete walls. See Figures 14.2.3a and 14.2.3b for high security fence and concrete wall examples.
- Regular chain link is easy cut, therefore stouter material needs to be specified.
- Landscape design should coordinate with region or headquarters landscape architects. Areas need to be visible to law enforcement.

'High security' proprietary fence designs may be employed, or unique case-by-case custom designs may be required. Where required, coordinate with the State Bridge and Structures Architect.

10.13 Temporary Bridges

10.13.1 General

Temporary bridges are defined as bridges that are in service for five or fewer years. Any bridge that is expected to be in service for more than five years shall be designed using the requirements for permanent structures.

These requirements apply to all temporary bridges regardless of the delivery contracting method. The temporary bridge(s) shall be shown on the Bridge Preliminary Plan and shall include the minimum required length and minimum roadway width, including shoulders.

The approaches to a temporary bridge, including but not limited to, slopes and reinforced slopes, shall be designed in accordance with Chapter 8 and the *Geotechnical Design Manual*.

The Contractor shall maintain the temporary bridge, including the driving surface, throughout its service life.

10.13.2 Structural Design Requirements

The temporary bridge, including the barriers or railings, shall be designed in accordance with the requirements of the latest edition of the LRFD-BDS, the *Bridge Design Manual*, including all design memoranda, and the Geotechnical Design Manual, as modified by the requirements of this section.

10.13.2.A Deck Design

The deck shall be either an orthotropic steel deck with an HMA overlay or a reinforced concrete deck.

Minimum thickness of a reinforced concrete deck shall be 7-½ inches for both concrete and steel superstructures.

Corrosion-resistant reinforcement requirements for concrete decks and precast concrete deck girders are waived. Minimum concrete cover over top slab reinforcement shall be 2 inches. Minimum concrete cover over bottom slab reinforcement shall be 1 inch.

The driving surface of the bridge shall be durable, skid-resistant deck, with an initial skid number of at least 35 and maintaining a skid number of 26 minimum, in accordance with AASHTO T 242 (Standard Method of Test for Frictional Properties of Paved Surfaces Using a Full-Scale Tire).

A 3-inch minimum thickness HMA overlay may be used for temporary bridges constructed of adjacently placed precast concrete structural elements.

10.13.2.B Traffic Barrier Design

Unless the contract documents require a higher test level (TL) demand and/or rail height, traffic barriers shall be designed for TL-3 collision load requirements and shall have a minimum vertical height of 39 inches for fall protection, which meets the requirements of WAC 296-880-40005 Section 1. The TL demand may be adjusted on a case-by-case basis for vehicle size and speed per LRFD-BDS Table 13.7.2-1.

Traffic barrier conduit for future use, per Section 10.8.4, need not be provided.

10.13.2.C Superstructure Design

Design live load may be reduced to a minimum of 75 percent of the HL-93 load provided that all Legal and Emergency Vehicle loadings provide a load rating of at least 1.0. This allowable reduction shall not apply to the deck. The design live load for the deck shall be 100 percent of the HL-93 load.

Design need not include an additional allowance of 35 pounds per square foot for a future overlay.

For precast prestressed concrete girders under service limit state load combinations, the allowable tensile stresses, after losses, stipulated in LRFD-BDS Article 5.9.2.3.2 may be used in lieu of those specified in Section 5.2.1C.

Steel bridges need not be painted.

Steel superstructure designs need not be checked for fatigue.

All welding, repair welding, and welding inspection of steel components shall conform to *Standard Specifications* Section 6-03.3(25) and 6-03.3(25)A.

10.13.2.D Seismic Design

Seismic design shall conform to the latest edition of the LRFD-SGS. As articulated in Article 3.6 of the LRFD-SGS, the design response spectra may be reduced by a factor no greater than 2.5. The Seismic Design Category (SDC) of the temporary bridge shall be based upon the reduced/modified response spectrum except that a temporary bridge classified as SDC B, C, or D, based on the unreduced spectrum, cannot be reclassified to SDC A.

The minimum support length provisions of Article 4.12 of the LRFD-SGS shall apply.

10.13.2.E Foundation Design

Precast prestressed concrete piles, steel “H” piles, timber piles, micropiles, and steel pipe piles may be used.

Soldier pile walls with treated timber lagging may be used.

10.13.3 NBI Requirements

Temporary or re-commissioned bridges used as detours and in-service longer than 90 days shall be subject to full National Bridge Inspection Standards (all SI&A data; ex., NBIS inspection, load ratings, and scour evaluation). All SI&A data shall be submitted to the Washington State NBI database within 90 days of opening to vehicular traffic. An open bridge is defined as a bridge that is near substantial completion with general highway traffic accessing/operating on the bridge in its final planned configuration. Phased construction stages, if carrying traffic for 90 days or longer shall meet these requirements.

Bridges open less than 90 days will need regular safety-type inspections to ensure safe operation of traffic.

Contracts shall clearly identify the owner and the entity responsible for meeting NBIS requirements.

Load rating of the structure shall be completed per Chapter 13. Rating factors for the Legal Trucks shown in Section 13.1.5.B shall not be less than 1.0.

10.14 Bridge Standard Drawings

Sign Structures

10.1-A1-1 Monotube Sign Bridge Layout (PDF 59KB) (DWG 63KB)
10.1-A1-2 Monotube Sign Bridge Details 1 (PDF 61KB) (DWG 64KB)
10.1-A1-3 Monotube Sign Bridge Details 2 (PDF 99KB) (DWG 80KB)

10.1-A2-1 Monotube Cantilever Layout (PDF 48KB) (DWG 33KB)
10.1-A2-2 Monotube Cantilever Details 1 (PDF 97KB) (DWG 76KB)
10.1-A2-3 Monotube Cantilever Details 2 (PDF 54KB) (DWG 45KB)

10.1-A3-1 Monotube Balanced Cantilever Layout Details (PDF 74KB) (DWG 68KB)
10.1-A3-2 Monotube Balanced Cantilever Details 1 (PDF 81KB) (DWG 74KB)
10.1-A3-3 Monotube Balanced Cantilever Details 2 (PDF 67KB) (DWG 56KB)

10.1-A4-1 Monotube Sign Structure Foundation Type 1, 1 of 2 (PDF 107KB) (DWG 81KB)
10.1-A4-2 Monotube Sign Structure Foundation Type 1, 2 of 2 (PDF 132KB) (DWG 100KB)
10.1-A4-3 Monotube Sign Structure Foundation Types 2 & 3 (PDF 85KB) (DWG 133KB)

10.1-A5-1 General Notes (PDF 104KB) (DWG 75KB)
10.1-A5-2 Monotube Sign Structures Common Details (PDF 108KB) (DWG 94KB)
10.1-A5-3 Monotube Sign Structure Single Slope Traffic Barrier Shape Cap (PDF 104KB) (DWG 75KB)

Bridge Mounted Sign Bracket

10.1-A6-1 Bridge Mounted Sign Bracket No. 1 - Layout (PDF 69KB) (DWG 97KB)
10.1-A6-2 Bridge Mounted Sign Bracket No. 1 - Geometry (PDF 69KB) (DWG 97KB)
10.1-A6-3 Bridge Mounted Sign Bracket Details 1 of 3 (PDF 116KB) (DWG 123KB)
10.1-A6-4 Bridge Mounted Sign Bracket Details 2 of 3 (PDF 109KB) (DWG 84KB)
10.1-A6-4a Bridge Mounted Sign Bracket Details 2 of 3 (PDF 75KB) (DWG 84KB)
10.1-A6-4b Bridge Mounted Sign Bracket Details 2 of 3 (PDF 92KB) (DWG 86KB)
10.1-A6-4c Bridge Mounted Sign Bracket Details 2 of 3 (PDF 99KB) (DWG 73KB)
10.1-A6-5 Bridge Mounted Sign Brackets (PDF 142KB) (DWG 214KB)

Traffic Barriers

10.2-A1-1 Shape F Traffic Barrier Detail 1 of 3 (PDF 86KB) (DWG 84KB)
10.2-A1-2 Shape F Traffic Barrier Detail 2 of 3 (PDF 80KB) (DWG 71KB)
10.2-A1-3 Shape F Traffic Barrier Detail 3 of 3 (PDF 92KB) (DWG 136KB)

10.2-A2-1 Shape F Traffic Barrier on Flat Slab Details 1 of 3 (PDF 137KB) (DWG 291KB)
10.2-A2-2 Shape F Traffic Barrier on Flat Slab Details 2 of 3 (PDF 129KB) (DWG 151KB)
10.2-A2-3 Shape F Traffic Barrier on Flat Slab Details 3 of 3 (PDF 157KB) (DWG 305KB)

10.2-A3-1 Single Slope Traffic Barrier Details 1 of 3 (PDF 92KB) (DWG 80KB)
10.2-A3-2 Single Slope Traffic Barrier Details 2 of 3 (PDF 86KB) (DWG 65KB)
10.2-A3-3 Single Slope Traffic Barrier Details 3 of 3 (PDF 94KB) (DWG 136KB)

10.2-A4-1 Pedestrian Barrier Details, 1 of 3 (PDF 91KB) (DWG 75KB)
10.2-A4-2 Pedestrian Barrier Details, 2 of 3 (PDF 75KB) (DWG 74KB)
10.2-A4-3 Pedestrian Barrier Details, 3 of 3 (PDF 91KB) (DWG 133KB)

10.2-A5-1A Traffic Barrier Shape F 42”, (TL-4) 1 of 3 (PDF 99KB) (DWG 97KB)
10.2-A5-1B Traffic Barrier Shape F 45”, (TL-5) 1 of 3 (PDF 99KB) (DWG 97KB)
10.2-A5-2 Traffic Barrier Shape F 42”, (TL-4 or TL-5), 2 of 3 (PDF 95KB) (DWG 83KB)
10.2-A5-3 Traffic Barrier Shape F 42”, (TL-4 or TL-5), 3 of 3 (PDF 94KB) (DWG 139KB)
10.2-A6-1 Traffic Barrier - Single Slope 45” TL5 1 of 3
10.2-A6-2 Traffic Barrier - Single Slope 45” TL5 2 of 3
10.2-A6-3 Traffic Barrier - Single Slope 45” TL5 3 of 3

Luminaire

10.2-A7-1 Luminaire on F Shape Traffic Barrier (PDF 169KB) (DWG 200KB)
10.2-A7-2 Luminaire on Single Slope Traffic Barrier (PDF 167KB) (DWG 470KB)

Rail Retrofits

10.4-A1-1 Thrie Beam Retrofit Concrete Baluster (PDF 67KB) (DWG 191KB)
10.4-A1-2 Thrie Beam Retrofit Concrete Railbase (PDF 56KB) (DWG 84KB)
10.4-A1-3 Thrie Beam Retrofit Concrete Curb (PDF 57KB) (DWG 250KB)
10.4-A1-4 WP Thrie Beam Retrofit SL1 - Details 1 of 2 (PDF 61KB) (DWG 75KB)
10.4-A1-5 WP Thrie Beam Retrofit SL1 - Details 2 of 2 (PDF 61KB) (DWG 78KB)

10.4-A2-1 TB Shape F Rehab - Details 1 of 3 (PDF 107KB) (DWG 100KB)
10.4-A2-2 TB Shape F Rehab - Details 2 of 3 (PDF 127KB) (DWG 157KB)
10.4-A2-3 TB Shape F Rehab - Details 3 of 3 (PDF 158KB) (DWG 172KB)

Railings

10.5-A1-1 Bridge Railing Type Pedestrian Details 1 of 2 (PDF 67KB) (DWG 58KB)
10.5-A1-2 Bridge Railing Type Pedestrian Details 2 of 2 (PDF 81KB) (DWG 75KB)

10.5-A2-1 Bridge Pedestrian Railing Type BP Details 1 of 2 (PDF 67KB) (DWG 60KB)
10.5-A2-2 Bridge Pedestrian Railing Type BP Details 2 of 2 (PDF 81KB) (DWG 75KB)

10.5-A3-1 Pedestrian Railing Type BP-Steel Details 1 of 2 (PDF 86KB) (DWG 106KB)
10.5-A3-2 Pedestrian Railing Type BP-Steel Details 2 of 2 (PDF 120KB) (DWG 157KB)

10.5-A4-1 Pedestrian Railing Details 1 of 2 (PDF 103KB) (DWG 126KB)
10.5-A4-2 Pedestrian Railing Details 2 of 2 (PDF 108KB) (DWG 121KB)

10.5-A5-2 Bridge Railing Type Snow Fence Details 1 of 2 (PDF 122KB) (DWG 64KB)
10.5-A5-3 Bridge Railing Type Snow Fence Details 2 of 2 (PDF 131KB) (DWG 63KB)
10.5-A5-4 Bridge Railing Type Chain Link Fence (PDF 97KB) (DWG 62KB)

10.5-A6-1 Bridge Railing Type BP-12 Details 1 of 2 (PDF 106KB) (DWG 53KB)
10.5-A6-2 Bridge Railing Type BP-12 Details 2 of 2 (PDF 104KB) (DWG 51KB)

10.5-A7-1 Bridge Railing Type S-BP-12 Details 1 of 2 (PDF 88KB) (DWG 43KB)
10.5-A7-2 Bridge Railing Type S-BP-12 Details 2 of 2 (PDF 119KB) (DWG 64KB)

Approach Slabs

10.6-A1-1 Approach Slab Detail 1 of 3 (PDF 125KB) (DWG 113KB)
10.6-A1-2 Approach Slab Detail 2 of 3 (PDF 72KB) (DWG 132KB)
10.6-A1-3 Approach Slab Detail 3 of 3 (PDF 147KB) (DWG 238KB)

10.6-A2-1 Concrete Pavement Seat Repair (PDF 98KB) (DWG 103KB)
10.6-A2-2 T-Section Pavement Seat Repair (PDF 97KB) (DWG 106KB)

Utility Hangers

10.8-A1-1 Utility Hanger Details for PS Concrete Girders (PDF 120KB) (DWG 192KB)
10.8-A1-2 Utility Hanger Details for Concrete Box (PDF 94KB) (DWG 150KB)

10.9-A1-1 Guide to Utility Hanger Details (PDF 97KB) (DWG 132KB)

Bridge Drains

10.11-A1-1 Bridge Drain Modification (PDF 72KB) (DWG 94KB)
10.11-A1-2 Bridge Drain Type 2 thru 5 (PDF 72KB) (DWG 94KB)

10.99 References

1. See Section 1.99.
2. AASHTO Standard Specifications for Highway Bridges, 17th Edition (2002), Washington DC.
3. NCHRP Report 230, "Recommended Procedures for the Safety Performance Evaluation of Highway Appurtenances", Transportation Research Board, 1991, Washington DC.
4. NCHRP Report 350, "Recommended Procedures for the Safety Performance Evaluation of Highway Features", Transportation Research Board, 1993, Washington DC.
5. NCHRP Report 663, "Design of Roadside Barrier Systems Placed on MSE Retaining Walls", NCHRP Project 22-20, Transportation Research Board, 2010, Washington DC.
6. WSDOT *Standard Plans*
7. WSDOT *Standard Specifications for Road, Bridge, and Municipal Construction* (*Standard Specifications*)
8. WSDOT E 1028 Context Sensitive Solutions Executive Order
9. Newman, O. Defensible Space: Crime Prevention Through Urban Design. New York: Macmillan. 1972
10. Jacobs, Jane. The Death and Life of Great American Cities. New York: Random House. 1961